CONTRACT 295-12-01
WATER LINE RELOCATION

MOUNTAIN WATER DISTRICT
PIKEVILLE, KENTUCKY
PIKE COUNTY
JLO3 098 72917 01U
DESKINS BRANCH CURVE REVISION
AND PASSING LANES (KY. 194)
ITEM NO. 12-281.00
SEPTEMBER 2012
"REVISED OCTOBER 22, 2014"

CONSTRUCTED 2016
BY: H_2O CONSTRUCTION CO. INC.
470 ZEIGIER DRIVE
PIKEVILLE, KENTUCKY 41501

CONTRACT 295-12-01

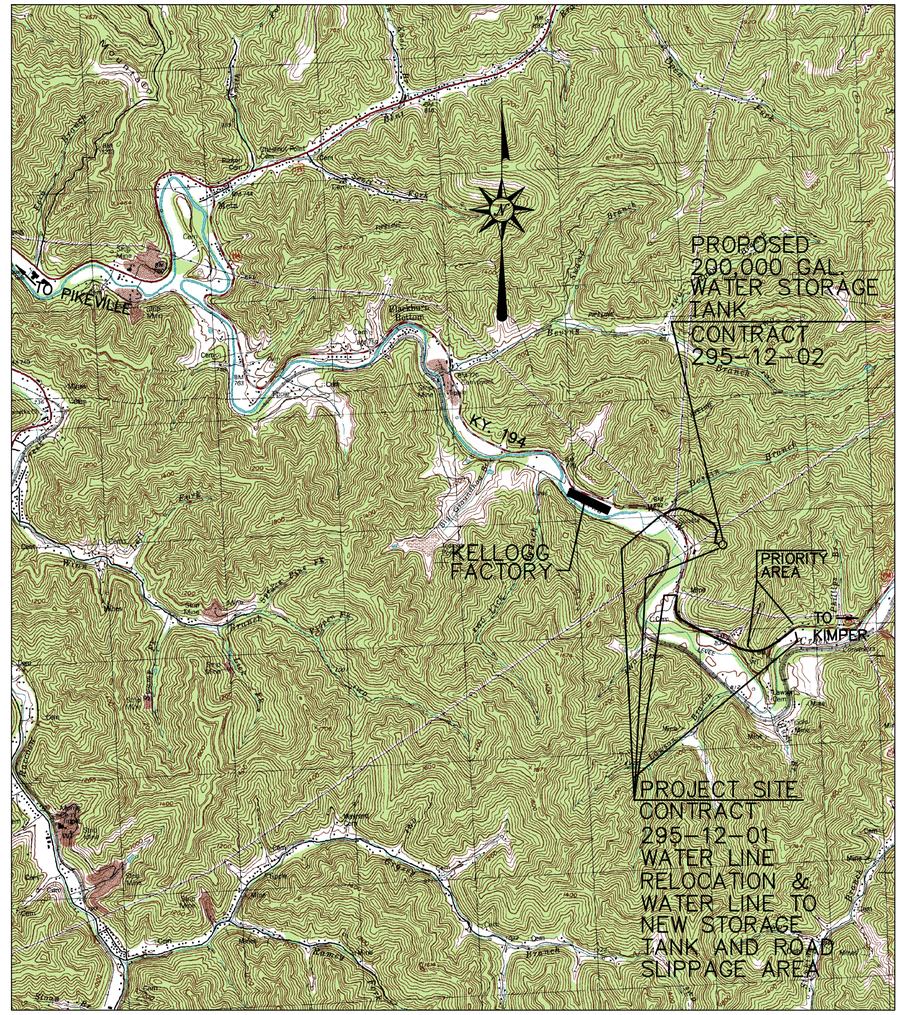

VICINITY MAP
SCALE ~ 1" = 2000'

COMPLETE DRAWING SET INCLUDES

DESCRIPTION	SHEET NO.
PROJECT MAP, VICINITY MAP, GENERAL NOTES & EROSION CONTROL	1
WATER LINE RELOCATION SUMMARY SHEET	2
PLAN SHEETS - KY 194	3-5
PLAN SHEET - WATER LINE RELOCATION AROUND ROAD SLIPPAGE/REPAIR AREA	5R-1 - (PRIORITY)
PLAN SHEET - WATER LINE TO PROPOSED TANK	6
CROSS SECTIONS (DELETED)	7
CROSS SECTIONS	8
STANDARD DETAILS	9-10
FUTURE ROAD WATER LINE CONSTRUCTION ~ FOR CONTRACTOR'S INFORMATION ONLY - (NOT IN THIS CONTRACT)	U1-U2

RECORD DRAWINGS

THESE RECORD DRAWINGS HAVE BEEN PREPARED BASED ON INFORMATION COMPILED AND FURNISHED BY OTHERS. THE ENGINEER HAS NOT VERIFIED THE ACCURACY AND/OR COMPLETENESS OF THIS INFORMATION AND SHALL NOT BE RESPONSIBLE FOR ANY ERRORS OR OMISSIONS WHICH MAY BE INCORPORATED HEREIN AS A RESULT.

MWD Mountain Water District

CONTRACT NO.
295-12-01
2012

STATE OF KENTUCKY
STEPHEN H. CAUDILL
19888
LICENSED PROFESSIONAL ENGINEER

WATER LINE RELOCATION
MOUNTAIN WATER DISTRICT
PIKEVILLE, KENTUCKY

FACSIMILES OF LICENSED PROFESSIONAL ENGINEER AND/OR LAND SURVEYOR SEALS, IF AFFIXED TO THIS DOCUMENT, SHALL BE CONSIDERED LEGITIMATE ONLY IF SIGNED AND DATED BY THE REGISTRANT.

BUD NOTE:

KENTUCKY STATUTES (KRS 367.4901 THROUGH 367.4917) REQUIRE THAT ALL EXCAVATORS PLANNING EXCAVATION OR DEMOLITION WORK SHALL NOTIFY ALL UTILITY COMPANIES IN THE AREA AND/OR AN UNDERGROUND PROTECTION SERVICE SUCH AS BUD (1-800-752-6007 OR 811) AT LEAST TWO (2) WORKING DAYS BEFORE COMMENCING WORK TO ALERT UTILITY COMPANIES IN THE AREA WITH UNDERGROUND FACILITIES OF THE PLANNED EXCAVATION OR DEMOLITION ACTIVITIES.

- [x] CLIENT REVIEW
- [x] BELL (QA) REVIEW
- [x] DIVISION OF WATER REVIEW
- [x] D.O.T. REVIEW
- [x] BID DOCUMENTS
- [x] RECORD DRAWINGS

Celebrating 100 Years
bell engineering

2480 fortune drive, suite 350
lexington, kentucky 40509
P: 859-278-5412 | F: 859-278-2911
www.hkbell.com

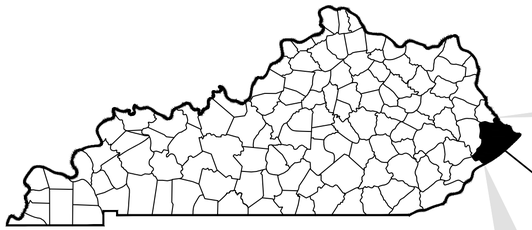

KENTUCKY
VICINITY MAP
NOT TO SCALE

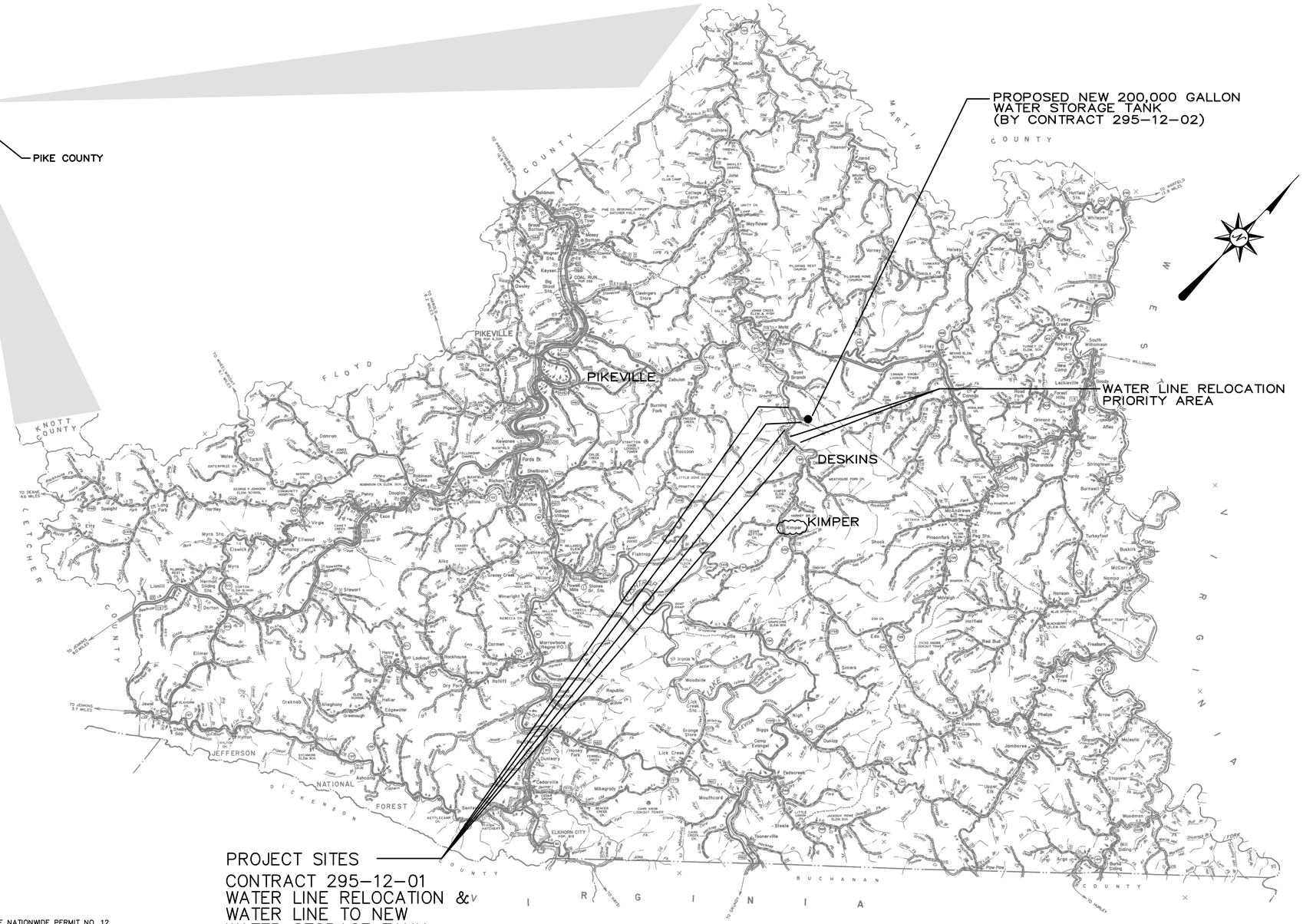

GENERAL NOTES FOR WATER MAINS:

- MINIMUM COVER OVER WATER PIPES TO BE 36 INCHES UNLESS OTHERWISE NOTED.
- MINIMUM COVER OVER WATER PIPES ON STATE RIGHT-OF-WAY TO BE 42 INCHES UNLESS NOTED/SHOWN OTHERWISE.
- ALL BORES UNDER STATE HIGHWAYS RIGHT-OF-WAY: SHALL BE A MINIMUM OF 42 INCHES DEPTH UNDER BOTTOM OF DITCH LINE TO TOP OF PROPOSED BORE AND/OR CASING PIPE ON BOTH SIDES OF THE HIGHWAY.
- MINIMUM COVER OVER VALVE NUT TO BE 12 INCHES (NO PAYMENT FOR EXTRA DEPTH). MAXIMUM COVER OVER VALVE NUTS TO BE 30 INCHES (NO EXTRA PAYMENT FOR REQUIRED EXTENSIONS).
- POURED CONCRETE BLOCKING OF FITTINGS REQUIRED AT NO EXTRA COST.
- THE CONTRACTOR SHALL HAVE THE OPTION OF USING FITTINGS OR EXTRA DEPTH TRENCHING AT ALL LOCATIONS WHERE VERTICAL BENDS ARE SHOWN. EITHER METHOD WILL BE AT NO EXTRA COST TO OWNER ABOVE THAT BID FOR FURNISHING, TRENCHING, LAYING AND BACKFILLING PIPE AND FITTINGS, AND SHALL BE APPROVED BY THE ENGINEER PRIOR TO INSTALLATION.
- LAY NEW LINES UNDER EXISTING WATER LINES AND GAS LINES, EXCEPT AS OTHERWISE NOTED OR DETERMINED IN THE FIELD. (NO PAYMENT FOR EXTRA DEPTH TRENCH).
- ALL PVC PIPE TO BE ASTM SDR-17 CLASS 250.
- ALL POLYETHYLENE PIPE PER CLASS OF PIPE ON PLANS OR FORM OF PROPOSAL.
- ALL D.I. PIPE TO BE CLASS 350.
- PAYMENT FOR PIPE WILL BE FOR LENGTHS ACTUALLY INSTALLED AND MEASURED IN THE FIELD.
- ANY SALVAGED MATERIALS WHICH HAVE NOT BEEN SPECIFIED TO BE REUSED SHALL BE REMOVED FROM THE JOB SITE BY THE CONTRACTOR AND PLACED AT AN OWNER DESIGNATED AREA AT NO EXTRA COST TO OWNER.
- LOCATIONS SHOWN FOR EXISTING UTILITIES ARE APPROXIMATE ONLY. EXACT LOCATIONS MUST BE DETERMINED BY CONTRACTOR BEFORE EXCAVATING FOR NEW FACILITIES.
- LINE MARKERS TO BE LOCATED AT PROPERTY AND OR FENCE LINES, OR AS DIRECTED BY THE ENGINEER AND SHOWN ON PLANS.
- ALL TIE-IN LOCATIONS SHALL BE UNCOVERED PRIOR TO CONSTRUCTION TO MAINTAIN PROPER ALIGNMENT AND ELEVATION OF NEW CONNECTIONS.
- CONTRACTOR SHALL INVENTORY REQUIRED MATERIALS, TRENCH DEWATERING EQUIPMENT, AND ASSEMBLE IF NECESSARY ALL REQUIRED FITTINGS PRIOR TO CUT-INS OR TIE-INS TO INSURE MINIMUM "DOWN TIME" FOR CONNECTION.
- SURFACE DRAINAGE SHALL BE MAINTAINED ON A DAY-BY-DAY BASIS.
- THE CONTRACTOR WILL BE REQUIRED TO DISPOSE OF ALL EXCESS EXCAVATED MATERIAL FROM WATER MAIN AND SERVICE LINE CONSTRUCTION.
- CONTRACTOR SHALL BE RESPONSIBLE FOR VERIFYING LOCATION OF ALL EXISTING UTILITIES PRIOR TO CONSTRUCTION.
- THE OWNER SHALL BE NOTIFIED A MINIMUM OF 72 HOURS IN ADVANCE OF ANY FLUSHING OR SCHEDULED "DOWN-TIME" AS IT RELATES TO WATER SERVICE.
- ALL METERS SHALL BE EQUIPPED PER OWNERS SPECIFICATION.
- ALL PIPE FITTINGS SHALL BE D.I.M.J. AND SHALL BE CONSIDERED INCIDENTAL TO THE COST OF THE WATER LINE OR APPURTENANCES.
- ALL CALL-OUTS PERTAINING TO THE WATER LINE CONSTRUCTION HAVE BEEN TAKEN FROM CENTERLINE OF KY. 194 D.O.T. PLAN SHEETS.
- THE CONTRACTOR SHALL PROFILE ALL COUNTY ROAD CROSSINGS AND CREEK CROSSINGS AND SUBMIT GATHERED SURVEY DATA TO THE OWNER FOR REVIEW AND APPROVAL PRIOR TO THE COMMENCEMENT OF ANY DRILLING, BORING OR OPEN CUTTING ACTIVITIES.
- CONTACT: MOUNTAIN WATER DISTRICT PIKEVILLE, KENTUCKY ATTN: ROY SAWYERS PH. 606-631-9162 CELL 606-616-8366
- CONTRACTOR TO CONTACT DEPARTMENT OF HIGHWAYS, DISTRICT 12, PIKEVILLE, KY. PH. 606-433-7791, DISTRICT ENGINEERS AND REQUEST R/W BE STAKED OUT PRIOR TO INSTALLATION OF ANY WATER LINES OR BORES.
- NO WORK TO BE DONE WITHOUT A MINIMUM OF 24 HOUR NOTICE TO THE MOUNTAIN WATER DISTRICT ENGINEER AND KY. DEPARTMENT OF HIGHWAYS OFFICE REPRESENTATIVES.
- CALL 811 (BUD) BEFORE STARTING ANY CONSTRUCTION.
- CONTRACTOR TO CONTACT DEPARTMENT OF HIGHWAYS AND OBTAIN BENCH MARK DATA FOR INSTALLATION OF PIPE ELEVATIONS AS SHOWN.

EROSION PREVENTION AND SEDIMENT CONTROL

THE CONTRACTOR SHALL SUBMIT A NOTICE OF INTENT (NOI) TO THE KENTUCKY DIVISION OF WATER AT LEAST 48 HOURS BEFORE ANY CONSTRUCTION ACTIVITY BEGINS.

THE CONTRACTOR SHALL SUBMIT A COPY OF THE NOTICE OF INTENT (NOI) TO THE LOCAL MUNICIPALITY.

THE CONTRACTOR SHALL PREPARE AND IMPLEMENT A "STORM WATER POLLUTION PREVENTION OR BEST MANAGEMENT PRACTICES (BMP) PLAN" AND KEEP A COPY OF THE PLAN ON SITE. THE PLAN SHALL BE PREPARED ACCORDING TO THE CURRENT EDITION OF THE KENTUCKY DIVISION OF WATER'S "EROSION PREVENTION AND SEDIMENT CONTROL PLAN FIELD GUIDE".

ALL STORM DRAINS THAT DISCHARGE INTO A DRAINAGE CHANNEL,STREAM, ETC., AND NOT ONTO AN OPEN FIELD SHALL HAVE AN INLET SEDIMENT CONTROL DEVICE SIMILAR TO THE SILTSACK AS MANUFACTURED BY ACF ENVIRONMENTAL, OR DANDY BAG II BY DANDY PRODUCTS, OR EQUAL.

ROCK CHECKS SHALL BE USED TO TRAP SEDIMENT TRAVELING ALONG DRAINAGE CHANNELS, ETC., STRAW BALES ARE NOT ACCEPTABLE.

ANY CONSTRUCTION ACCESS ROAD, ETC., THAT JOINS ANY PAVED DRIVEWAY OR ROAD SHALL HAVE A CRUSHED STONE ENTRANCE CREATED ACCORDING TO THE DRAWINGS AND THE KENTUCKY EROSION PREVENTION AND SEDIMENT CONTROL PLAN FIELD GUIDE.

STORM WATER RUNOFF FROM UNDISTURBED AREAS SHALL BE DIVERTED AROUND CONSTRUCTION SITES BY THE USE OF DIVERSION BERMS OR DIVERSION DITCHES.

SILT FENCES SHALL BE USED TO TRAP SEDIMENT FROM SEDIMENT LADEN STORM WATER ROLLING DOWN HILLS, ETC., ACCORDING TO THE DRAWINGS AND THE KENTUCKY EROSION PREVENTION AND SEDIMENT CONTROL PLAN FIELD GUIDE.

A DETAILED EROSION CONTROL PLAN SHALL BE PREPARED BY THE CONTRACTOR AND SUBMITTED TO THE ENGINEER FOR REVIEW AND APPROVAL PRIOR TO STARTING ANY CONSTRUCTION ACTIVITIES.

NOTE TO CONTRACTOR:

- CONTRACTOR TO MEET OR EXCEED THE NATIONWIDE PERMIT NO. 12 AS SHOWN IN DEC. 13, 1996 OR LATEST FEDERAL REGISTER, FINAL NOTICE OF ISSUANCE, REISSUANCE AND MODIFICATION OF NATIONWIDE PERMITS (61 FR 65874).
- CONTRACTOR TO MEET CURRENT REQUIREMENTS AS OUTLINED IN LATEST NOTICE OF INTENT (NOI) FOR STORM WATER DISCHARGE GENERAL REQUIREMENTS AS DESCRIBED BY:
  DEPARTMENT FOR ENVIRONMENTAL PROTECTION
  14 REILLY ROAD
  FRANKFORT, KENTUCKY
  PH. (502)564-3410
- CONTRACTOR TO MEET/EXCEED 401 CLEAN WATER ACT GENERAL CERTIFICAITON, NATIONWIDE PERMIT NO. 12, UTILITY LINE BACKFILL AND BEDDING AS OUTLINED BY THE KENTUCKY NATURAL RESOURCES AND ENVIRONMENTAL PROTECTION CABINET.
- CONTRACTOR TO MEET/EXCEED TEMPORARY SEEDING REQUIREMENTS OF DIVISION OF WATER WHICH REQUIRE ALL DISTURBED AREAS TO BE TEMPORARILY SEEDED WITHIN 14 DAYS AFTER CONSTRUCTION. FOR ADDITIONAL INFORMATION CONTACT:
  DIVISION OF WATER
  FRANKFORT, KENTUCKY

1999 EDITION

GENERAL HIGHWAY MAP

PIKE COUNTY

KENTUCKY

PREPARED BY THE
KENTUCKY TRANSPORTATION CABINET
DEPARTMENT OF HIGHWAYS
DIVISION OF PLANNING
IN COOPERATION WITH THE
U.S. DEPARTMENT OF TRANSPORTATION
FEDERAL HIGHWAY ADMINISTRATION

SCALE 1/125000
CONFORMAL CONIC PROJECTION
1 0 1 2 3 4 MILES

RECORD DRAWINGS

THESE RECORD DRAWINGS HAVE BEEN PREPARED BASED ON INFORMATION COMPILED AND FURNISHED BY OTHERS. THE ENGINEER HAS NOT VERIFIED THE ACCURACY AND/OR COMPLETENESS OF THIS INFORMATION AND SHALL NOT BE RESPONSIBLE FOR ANY ERRORS OR OMISSIONS WHICH MAY BE INCORPORATED HEREIN AS A RESULT.

02/17/15

DESIGNER	SRD	DATE	BY	REVISION
DRAWN	DRH			
CHECKED	SRD			
APPROVED	SHC			

GRAPHIC SCALE

SCALE: AS NOTED

ALL RIGHTS RESERVED
THIS DOCUMENT IS THE PROPERTY OF BELL ENGINEERING AND SHALL NOT BE REPRODUCED IN WHOLE OR IN PART OR USED FOR CONSTRUCTION OF OTHER THAN THIS SPECIFIC PROJECT WITHOUT THE WRITTEN PERMISSION OF BELL ENGINEERING.
FACSIMILES OF LICENSED PROFESSIONAL ENGINEER AND/OR LAND SURVEYOR SEALS, IF AFFIXED TO THIS DOCUMENT, SHALL BE CONSIDERED LEGITIMATE ONLY IF SIGNED AND DATED BY THE REGISTRANT.

STATE OF KENTUCKY
STEPHEN H. CAUDILL
19888
LICENSED
PROFESSIONAL ENGINEER

bell engineering
Lexington, KY (859) 278-5412
Hopkinsville, KY (270) 886-5466

KY. 194 – DESKINS BRANCH
WATER LINE RELOCATION
MOUNTAIN WATER DISTRICT
PIKEVILLE, KENTUCKY

PROJECT MAP, VICINITY MAP
GENERAL NOTES & EROSION CONTROL

DIVISION	ALL
CONTRACT NO.	295-12-01
DATE	SEPT., 2012
SHEET NO.	1 OF 10

COUNTY OF	FISCAL YEAR	SHEET NO.	TOTAL SHEETS
PIKE			

WATER LINE RELOCATION

SUMMARY

DIVISION "A" PROPOSED WATER LINE CONSTRUCTION

ITEM	DESCRIPTION	UNIT	PROJECT TOTAL
1	8 INCH CLASS 250 (SDR17) PVC PIPE, FURNISH AND INSTALL	L.F.	1,830 L.F.
2	8 INCH CLASS 200 POLYETHENE PIPE, FURNISH AND INSTALL	L.F.	800 L.F.
3	8 INCH CLASS 350 DUCTILE IRON, RESTRAINED JOINT PIPE W/ PETROLEUM/HYDROCARBON RESISTANT GASKETS, FURNISH AND INSTALL	L.F.	620 L.F.
4	CUT, CAP AND BLOCK EXISTING 2 INCH LINE	EACH	1 EACH
5	8 INCH DIMJ RESILIENT SEAT GATE VALVE, BOX AND CONCRETE COLLAR, COMPLETE	EACH	4 EACH
6	8 INCH X 8 INCH DIMJ TAPPING SLEEVE, VALVE, BOX AND CONCRETE COLLAR, COMPLETE	EACH	2 EACH
7	16 INCH X 0.312 INCH STEEL COVER PIPE IN OPEN CUT INCLUDING SPACERS AND END SEALS, FURNISH AND INSTALL, COMPLETE	L.F.	320 L.F.
8	3/4 INCH OR 1 INCH PE SERVICE PIPE WITH PE OR PVC COVER PIPE, FURNISH AND INSTALL, COMPLETE W/CORP. OR CURB VALVE	L.F.	320 L.F.
9	5/8 INCH X 3/4 INCH METER SETTING, INCLUDING RADIO READ METER, YOKE, BOX, CORP STOP, SADDLE, TAP, FURNISH AND INSTALL, COMPLETE	EACH	5 EACH
10	RECONNECT TO EXISTING SERVICE LINE, INCLUDING FITTINGS AND CUT/CAP/BLOCK EXISTING SERVICE LINE, COMPLETE	EACH	5 EACH
11	CUT/CAP AND BLOCK EXISTING 8 INCH LINE, COMPLETE	EACH	3 EACH
12	TEST METER ASSEMBLY, FURNISH AND INSTALL, COMPLETE	EACH	2 EACH
13	FLUSH HYDRANT ASSEMBLY, FURNISH AND INSTALL COMPLETE	EACH	3 EACH
14	FLOW TEST ASSEMBLY, FURNISH AND INSTALL, COMPLETE	EACH	1 EACH
15	AUTOMATIC AIR RELEASE ASSEMBLY, FURNISH AND INSTALL, COMPLETE	EACH	1 EACH
16	CRUSHED ROCK ON TRENCH SURFACE ((_LFX225 lb/LF)/2,000lb/TON=_TON)	TON	450 TON
17	FIBERGLASS LINE MARKER, FURNISH AND INSTALL, COMPLETE	EACH	16 EACH
18	2 INCH THICKNESS ASPHALT SURFACE REPLACEMENT, TRENCH WIDTH ON STREETS, DRIVES AND ROADS, COMPLETE	L.F.	170 L.F.
19	EXTRA FOR MECHANICAL TAMPING OF TRENCH BACKFILL	C.Y.	5 C.Y.
20	EXTRA FOR CLASS 2 OR 3 D.O.T. SPEC CHANNEL LINER	TON	50 TON
21	ABANDON AND REMOVE EXISTING HYDRANT	EACH	1 EACH

DIVISION "B" PROPOSED WATER LINE CONSTRUCTION TO NEW 200,000 GAL. TANK

ITEM	DESCRIPTION	UNIT	PROJECT TOTAL
1	8 INCH CLASS 350 D.I.R.J. PIPE, FURNISH AND INSTALL	L.F.	1,500 L.F.
2	8X8 INCH TAPPING SLEEVE,TAPPING VALVE, BOX AND CONCRETE COLLAR, COMPLETE	EACH	1 EACH
3	END OF WATER LINE CONCRETE ANCHOR, COMPLETE PER DETAIL W/TEMPORARY BLOWOFF, 8 INCH D.I.R.J. CAP	EACH	1 EACH
4	CRUSHED ROCK ON TRENCH SURFACE ((_LFX225 lb/LF)/2,000lb/TON=_TON)	TON	275 TON
5	FIBERGLASS LINE MARKERS, FURNISH/INSTALL COMPLETE	EACH	8 EACH
6	EXTRA FOR CRUSHED ROCK STABILIZATION ON ORDER OF ENGINEER	TON	5 TON
7	EXTRA FOR CRUSHED ROCK FOR PIPE BEDDING ON ORDER OF ENGINEER	TON	5 TON
8	EXTRA FOR CLASS 2 OR 3 D.O.T. SPEC CHANNEL LINER ON ORDER OF ENGINEER	TON	20 TON
9	8 INCH RES. SEAT GATE VALVE, VALVE BOX WITH CONCRETE COLLAR	EACH	1 EACH
10	FLUSHING HYDRANT ASSEMBLY COMPLETE	EACH	2 EACH
11	TEST METER ASSEMBLY COMPLETE	EACH	1 EACH

THIS SHEET IS FOR UTLITY CONSTRUCTION ONLY

RECORD DRAWINGS

THESE RECORD DRAWINGS HAVE BEEN PREPARED BASED ON INFORMATION COMPILED AND FURNISHED BY OTHERS. THE ENGINEER HAS NOT VERIFIED THE ACCURACY AND/OR COMPLETENESS OF THIS INFORMATION AND SHALL NOT BE RESPONSIBLE FOR ANY ERRORS OR OMISSIONS WHICH MAY BE INCORPORATED HEREIN AS A RESULT.

DIVISION "C" (PRIORITY) PROPOSED WATER LINE CONSTRUCTION

ITEM	DESCRIPTION	UNIT	PROJECT TOTAL
1	8 INCH & 6 INCH CLASS 250 (SDR17) PVC PIPE, FURNISH & INSTALL	L.F.	1,660 LF
2	8 INCH RESTRAINED JOINT D.I. PIPE, FURNISH & INSTALL	L.F.	2,770 LF
3	CUT, CAP AND BLOCK EXISTING 8 INCH LINE	EACH	2 EACH
4	8"X8" D.I.M.J. TAPPING SLEEVE, 8"VALVE, BOX, CONCRETE COLLAR	EACH	2 EACH
5	3/4 INCH POLYETHYLENE SERVICE PIPE, FURNISH & INSTALL	L.F.	340 LF
6	1" COPPER SERVICE PIPE W/CORP. STOP & CURB VALVE FURNISH & INSTALL	L.F.	450 LF
7	RECONNECT TO EXISTING SERVICE LINE, INCLUDING CUT/CAP/BLOCK FURNISH & INSTALL	EACH	4 EACH
8	TEST METER ASSEMBLY COMPLETE, FURNISH & INSTALL	EACH	2 EACH
9	FLUSHING HYDRANT ASSEMBLY, FURNISH & INSTALL	EACH	2 EACH
10	FIBERGLASS LINE MARKER	EACH	13 EACH
11	2 INCH THICKNESS BITUMINOUS SURFACE REPLACEMENT	TON	180 TON
12	CRUSHED ROCK ON TRENCH SURFACE	TON	80 TON
13	16 INCH STEEL COVER PIPE AND BORE	L.F.	140 LF
14	RELOCATE EXISTING METER COMPLETE	EACH	2 EACH

ABANDONED QUANTITIES

ITEM	DESCRIPTION	UNIT	PROJECT TOTAL
1	8 INCH PVC PIPE	L.F.	2,000 L.F.
2	3/4 INCH P.E. SERVICE PIPE	L.F.	1000 L.F.
3	BITUMINOUS PAVING	L.F.	60 LF
4	CRUSHED STONE TEMP. SURFACE	TON	70 TON
5	LINE MARKER	EACH	1 EACH

ABANDON DIVISION "A"

ITEM	DESCRIPTION	UNIT	PROJECT TOTAL
1	8 INCH PVC PIPE	L.F.	2,800 LF
2	8 INCH DUCTILE IRON W/HYDROCARBON RESISTANT GASKETS	L.F.	650 LF
3	2 INCH PVC PIPE AND 1 INCH PVC PIPE	L.F.	290 LF
4	8 INCH DIMJ RES. SEAT GATE VALVE, BOX & COLLAR, COMPLETE	EACH	1 EACH
5	3/4 INCH SERVICE PIPE W/CORP. STOP OR CURB VALVE	L.F.	180 LF
6	5/8 INCH X 3/4 INCH METER SETTING INCLUDING METER, YOKE, BOX, COVER, CORP STOP AND SADDLE COMPLETE	EACH	4 EACH
7	FLUSHING HYDRANT ASSEMBLY	EACH	1 EACH
8	FLOW TEST ASSEMBLY	EACH	1 EACH
9	CRUSHED ROCK ON TRENCH SURFACE	TON	50 TON
10	FIBERGLASS LINE MARKER	EACH	3 EACH
11	2 INCH THICKNESS BITUMINOUS SURFACE	L.F.	90 LF
12	1" CORP. STOP	EACH	1 EACH
13	ABANDON EXISTING HYDRANT	EACH	1 EACH

ABANDON DIVISION "B"
(LINE TO EXISTING TANK)

ITEM	DESCRIPTION	UNIT	PROJECT TOTAL
1	8 INCH PVC PIPE TO EXISTING TANK	L.F.	330 LF
2	CUT/CAP/BLOCK EXISTING 8 INCH WATER LINE	EACH	1

02/17/15

DESIGNER	SRD	DATE	BY	REVISION
DRAWN	DRH			
CHECKED	CRR			
APPROVED	SHC			

GRAPHIC SCALE

SCALE: NONE

ALL RIGHTS RESERVED
THIS DOCUMENT IS THE PROPERTY OF BELL ENGINEERING AND SHALL NOT BE REPRODUCED IN WHOLE OR IN PART OR USED FOR CONSTRUCTION OF OTHER THAN THIS SPECIFIC PROJECT WITHOUT THE WRITTEN PERMISSION OF BELL ENGINEERING.
FACSIMILES OF LICENSED PROFESSIONAL ENGINEER AND/OR LAND SURVEYOR SEALS, IF AFFIXED TO THIS DOCUMENT, SHALL BE CONSIDERED LEGITIMATE ONLY IF SIGNED AND DATED BY THE REGISTRANT.

STATE OF KENTUCKY STEPHEN H. CAUDILL 19888 LICENSED PROFESSIONAL ENGINEER

bell engineering
Lexington, KY (859) 278-5412
Hopkinsville, KY (270) 886-5466

KY. 194 – DESKINS BRANCH
WATER LINE RELOCATION
MOUNTAIN WATER DISTRICT
PIKEVILLE, KENTUCKY

WATER LINE RELOCATION UTILITY SUMMARY

DIVISION	ALL
CONTRACT NO.	295-12-01
DATE	SEPT., 2012
SHEET NO.	2 OF 10

B.M. #5 ELEV. 847.09 31.66' RT. STA. 38+20.66
R.R. SPIKE IN POWER POLE.

B.M. #6 ELEV. 868.91 122.39' LT. STA. 49+49.17
R.R. SPIKE IN SOLID ROCK HIGHWALL.

COUNTY OF	ITEM NO.	SHEET NO.
PIKE	12-281.00	R3

REVISED PLAN DATE: SEPT. 26, 2012

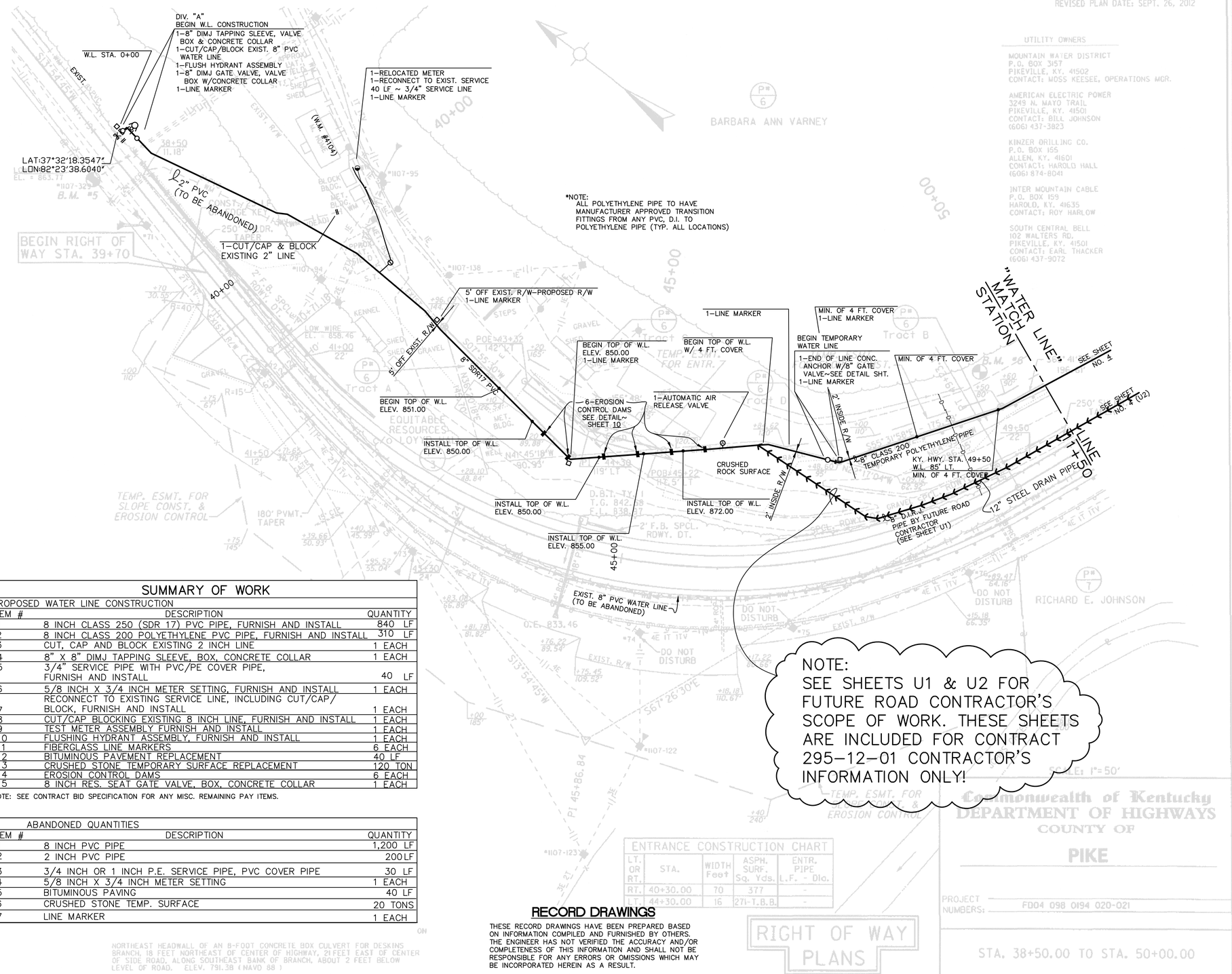

UTILITY OWNERS

MOUNTAIN WATER DISTRICT
P.O. BOX 3157
PIKEVILLE, KY. 41502
CONTACT: MOSS KEESEE, OPERATIONS MGR.

AMERICAN ELECTRIC POWER
3249 N. MAYO TRAIL
PIKEVILLE, KY. 41501
CONTACT: BILL JOHNSON
(606) 437-3823

KINZER DRILLING CO.
P.O. BOX 155
ALLEN, KY. 41601
CONTACT: HAROLD HALL
(606) 874-8041

INTER MOUNTAIN CABLE
P.O. BOX 159
HAROLD, KY. 41635
CONTACT: ROY HARLOW

SOUTH CENTRAL BELL
102 WALTERS RD.
PIKEVILLE, KY. 41501
CONTACT: EARL THACKER
(606) 437-9072

LEGEND

	EXISTING	PROPOSED
WATER LINE	—W—	
WATER METER		
WATER VALVE		
HYDRANT ASSEMBLY		
TEST METER ASSEMBLY		
LINE MARKER		

SUMMARY OF WORK

PROPOSED WATER LINE CONSTRUCTION

ITEM #	DESCRIPTION	QUANTITY
1	8 INCH CLASS 250 (SDR 17) PVC PIPE, FURNISH AND INSTALL	840 LF
2	8 INCH CLASS 200 POLYETHYLENE PVC PIPE, FURNISH AND INSTALL	310 LF
3	CUT, CAP AND BLOCK EXISTING 2 INCH LINE	1 EACH
4	8" X 8" DIMJ TAPPING SLEEVE, BOX, CONCRETE COLLAR	1 EACH
5	3/4" SERVICE PIPE WITH PVC/PE COVER PIPE, FURNISH AND INSTALL	40 LF
6	5/8 INCH X 3/4 INCH METER SETTING, FURNISH AND INSTALL	1 EACH
7	RECONNECT TO EXISTING SERVICE LINE, INCLUDING CUT/CAP/ BLOCK, FURNISH AND INSTALL	1 EACH
8	CUT/CAP BLOCKING EXISTING 8 INCH LINE, FURNISH AND INSTALL	1 EACH
9	TEST METER ASSEMBLY FURNISH AND INSTALL	1 EACH
10	FLUSHING HYDRANT ASSEMBLY, FURNISH AND INSTALL	1 EACH
11	FIBERGLASS LINE MARKERS	6 EACH
12	BITUMINOUS PAVEMENT REPLACEMENT	40 LF
13	CRUSHED STONE TEMPORARY SURFACE REPLACEMENT	120 TON
14	EROSION CONTROL DAMS	6 EACH
15	8 INCH RES. SEAT GATE VALVE, BOX, CONCRETE COLLAR	1 EACH

NOTE: SEE CONTRACT BID SPECIFICATION FOR ANY MISC. REMAINING PAY ITEMS.

ABANDONED QUANTITIES

ITEM #	DESCRIPTION	QUANTITY
1	8 INCH PVC PIPE	1,200 LF
2	2 INCH PVC PIPE	200 LF
3	3/4 INCH OR 1 INCH P.E. SERVICE PIPE, PVC COVER PIPE	30 LF
4	5/8 INCH X 3/4 INCH METER SETTING	1 EACH
5	BITUMINOUS PAVING	40 LF
6	CRUSHED STONE TEMP. SURFACE	20 TONS
7	LINE MARKER	1 EACH

NORTHEAST HEADWALL OF AN 8-FOOT CONCRETE BOX CULVERT FOR DESKINS BRANCH, 18 FEET NORTHEAST OF CENTER OF HIGHWAY, 21 FEET EAST OF CENTER OF SIDE ROAD, ALONG SOUTHEAST BANK OF BRANCH, ABOUT 2 FEET BELOW LEVEL OF ROAD. ELEV. 791.38 (NAVD 88)

ENTRANCE CONSTRUCTION CHART

LT. OR RT.	STA.	WIDTH Feet	ASPH. SURF. Sq. Yds.	ENTR. PIPE L.F. - Dia.
RT.	40+30.00	70	377	-
LT.	44+30.00	16	271-T.B.B.	-

RECORD DRAWINGS

THESE RECORD DRAWINGS HAVE BEEN PREPARED BASED ON INFORMATION COMPILED AND FURNISHED BY OTHERS. THE ENGINEER HAS NOT VERIFIED THE ACCURACY AND/OR COMPLETENESS OF THIS INFORMATION AND SHALL NOT BE RESPONSIBLE FOR ANY ERRORS OR OMISSIONS WHICH MAY BE INCORPORATED HEREIN AS A RESULT.

RIGHT OF WAY PLANS

SCALE: 1"=50'

Commonwealth of Kentucky
DEPARTMENT OF HIGHWAYS
COUNTY OF
PIKE

PROJECT NUMBERS: FD04 098 0194 020-021

STA. 38+50.00 TO STA. 50+00.00

02/17/15

DESIGNER	SRD	DATE	BY	REVISION
DRAWN	DRH	6/14	SRD	REV. ROUTE FOR TEMPORARY LINE STA. 46+84-54+50 AND ROUTE TO AVOID ROAD SLIPPAGE CONSTRUCTION
CHECKED	CRR			
APPROVED	SHC			

GRAPHIC SCALE

SCALE: 1"=50'

ALL RIGHTS RESERVED
THIS DOCUMENT IS THE PROPERTY OF BELL ENGINEERING AND SHALL NOT BE REPRODUCED IN WHOLE OR IN PART OR USED FOR CONSTRUCTION OF OTHER THAN THIS SPECIFIC PROJECT WITHOUT THE WRITTEN PERMISSION OF BELL ENGINEERING.
FACSIMILES OF LICENSED PROFESSIONAL ENGINEER AND/OR LAND SURVEYOR SEALS, IF AFFIXED TO THIS DOCUMENT, SHALL BE CONSIDERED LEGITIMATE ONLY IF SIGNED AND DATED BY THE REGISTRANT.

STATE OF KENTUCKY STEPHEN H. CAUDILL 19888 LICENSED PROFESSIONAL ENGINEER

bell engineering

Lexington, KY (859) 278-5412
Hopkinsville, KY (270) 886-5466

KY. 194 – DESKINS BRANCH
WATER LINE RELOCATION
MOUNTAIN WATER DISTRICT
PIKEVILLE, KENTUCKY

KY. HWY. 194 STATION 38+00 TO 50+00

DIVISION	A
CONTRACT NO.	295-12-01
DATE	SEPT., 2012
SHEET NO.	3 OF 10

COUNTY OF	ITEM NO.	SHEET NO.
PIKE	12-264.00	R5

REVISED PLAN DATE: OCT. 30, 2014

SUMMARY OF WORK

PROPOSED WATER LINE CONSTRUCTION

ITEM #	DESCRIPTION	QUANTITY
1	12 INCH SDR35 PVC COVER PIPE WITH LINK SEALS AT GAS LINE CROSSING	20 LF
2	8 INCH CLASS 250 (SDR 17) PVC PIPE, FURNISH AND INSTALL	990 LF
3	8 INCH CLASS 350 RESTRAINED JOINT D.I. PIPE WITH HYDROCARBON GASKETS	200 LF
4	3/4" OR 1" SERVICE PIPE W/CORP. STOP OR CURB VALVE, PVC/PE COVER PIPE	225 LF
5	5/8 INCH X 3/4 INCH METER SETTING, FURNISH AND INSTALL	4 EACH
6	RECONNECT TO EXISTING SERVICE LINE, INCLUDING CUT/CAP/BLOCK EXISTING LINE	4 EACH
7	16" INCH X 0.312 INCH STEEL COVER PIPE, FURNISH AND INSTALL IN OPEN CUT	200 LF
8	8 INCH RESILIENT SEAT GATE VALVE, BOX AND CONCRETE COLLAR	2 EACH
9	AUTOMATIC AIR RELEASE ASSEMBLY FURNISH AND INSTALL	1 EACH
10	FLOW TEST STATION, FURNISH AND INSTALL	1 EACH
11	TEST METER ASSEMBLY FURNISH AND INSTALL	1 EACH
12	FLUSHING HYDRANT ASSEMBLY FURNISH AND INSTALL	1 EACH
13	FIBERGLASS LINE MARKERS	7 EACH
14	BITUMINOUS PAVEMENT REPLACEMENT	450 LF
15	CRUSHED STONE TEMPORARY SURFACE REPLACEMENT	225 TONS
16	8" CLASS 200 POLYETHYLENE PIPE, FURNISH AND INSTALL	490 LF

NOTE: SEE CONTRACT BID SPECIFICATION FOR ANY MISC. REMAINING PAY ITEMS.

ABANDONED QUANTITIES

ITEM #	DESCRIPTION	QUANTITY
1	8 INCH PVC PIPE	1,200 LF
2	8 INCH D.I. RES. JT. PIPE WITH HYDROCARBON GASKETS	200 LF
3	1 INCH PVC PIPE	90 LF
4	1 INCH CORP STOP	1 EACH
5	8 INCH GATE VALVE	1 EACH
6	3/4 INCH SERVICE PIPE	470 LF
7	5/8 INCH X 3/4 INCH METER SETTING	6 EACH
8	BITUMINOUS PAVING	60 LF
9	CRUSHED STONE TEMP. SURFACE	20 TONS
10	FLOW TEST STATION	1 EACH

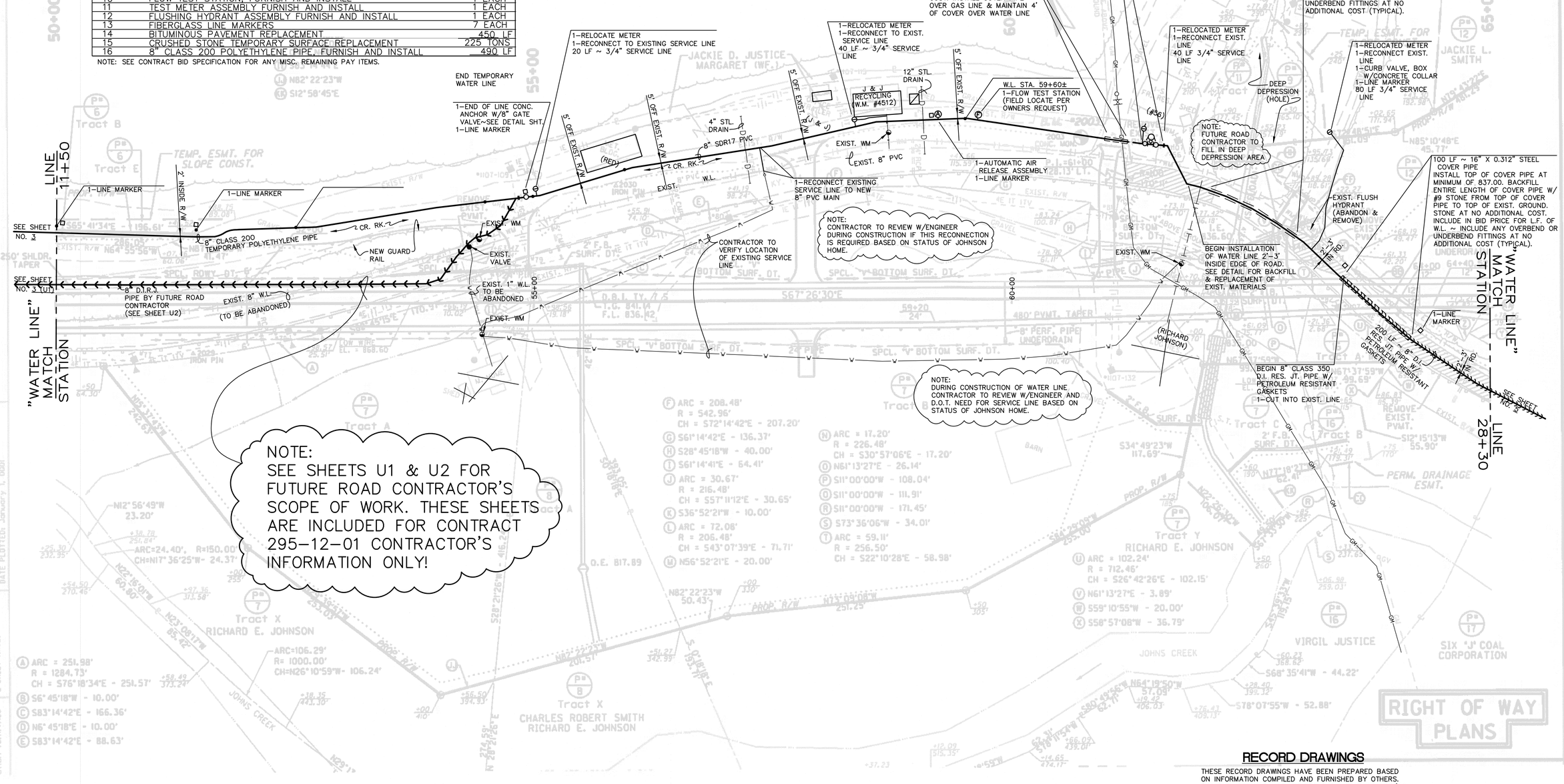

RECORD DRAWINGS

THESE RECORD DRAWINGS HAVE BEEN PREPARED BASED ON INFORMATION COMPILED AND FURNISHED BY OTHERS. THE ENGINEER HAS NOT VERIFIED THE ACCURACY AND/OR COMPLETENESS OF THIS INFORMATION AND SHALL NOT BE RESPONSIBLE FOR ANY ERRORS OR OMISSIONS WHICH MAY BE INCORPORATED HEREIN AS A RESULT.

REVISED 02/17/15

		DATE	BY	REVISION
DESIGNER	SRD			
DRAWN	DRH	6/14	SRD	REV. ROUTE FOR TEMPORARY LINE STA. 46+84-54+50 AND ROUTE TO AVOID ROAD SLIPPAGE CONSTRUCTION
CHECKED	CRR			
APPROVED	SHC			

GRAPHIC SCALE

SCALE: 1"=50'

ALL RIGHTS RESERVED
THIS DOCUMENT IS THE PROPERTY OF BELL ENGINEERING AND SHALL NOT BE REPRODUCED IN WHOLE OR IN PART OR USED FOR CONSTRUCTION OF OTHER THAN THIS SPECIFIC PROJECT WITHOUT THE WRITTEN PERMISSION OF BELL ENGINEERING.
FACSIMILES OF LICENSED PROFESSIONAL ENGINEER AND/OR LAND SURVEYOR SEALS, IF AFFIXED TO THIS DOCUMENT, SHALL BE CONSIDERED LEGITIMATE ONLY IF SIGNED AND DATED BY THE REGISTRANT.

STATE OF KENTUCKY — STEPHEN H. CAUDILL — 19888 — LICENSED PROFESSIONAL ENGINEER

bell engineering
Lexington, KY (859) 278-5412
Hopkinsville, KY (270) 886-5466

KY. 194 – DESKINS BRANCH
WATER LINE RELOCATION
MOUNTAIN WATER DISTRICT
PIKEVILLE, KENTUCKY

KY. HWY. STATION 50+00 TO STATION 65+00

DIVISION	A
CONTRACT NO.	295-12-01
DATE	SEPT., 2012
SHEET NO.	4-1 OF 10

COUNTY OF	ITEM NO.	SHEET NO.
PIKE	12-281.00	R7

REVISED PLAN DATE: NOVEMBER 25, 2011

SUMMARY OF WORK

PROPOSED WATER LINE CONSTRUCTION

ITEM #	DESCRIPTION	QUANTITY
1 DELETE	~~8 INCH CLASS 350 RESTRAINED JOINT D.I. PIPE FURNISH AND INSTALL~~	~~400 LF~~
2	8 INCH CLASS 350 RESTRAINED JOINT D.I. PIPE WITH PETROLEUM RESISTANT GASKETS	420 LF
3 DELETE	~~3/4" OR 1" SERVICE PIPE WITH PVC/PE COVER PIPE CONCRETE COLLAR~~	~~80 LF~~
4	16 INCH X 0.312 INCH STEEL COVER PIPE FURNISH AND INSTALL IN OPEN CUT	120 LF
5	CUT, CAP AND BLOCK EXISTING 8 INCH LINE FURNISH AND INSTALL	2 EACH
6	CUT INTO EXISTING 8 INCH LINE GOING TO EXISTING STORAGE TANK	1 EACH
7	~~TEST METER ASSEMBLY FURNISH AND INSTALL~~	~~2 EACH~~
8	FLUSHING HYDRANT ASSEMBLY FURNISH AND INSTALL	1 EACH
9	FIBERGLASS LINE MARKERS	3 EACH
10	BITUMINOUS PAVEMENT REPLACEMENT	130 LF
11	CRUSHED STONE TEMPORARY SURFACE REPLACEMENT	30 TONS
12	8 INCH X 8 INCH D.I.M.J. TAPPING SLEEVE, VALVE, BOX AND CONCRETE COLLAR	1 EACH
13	8 INCH RES. SEAT GATE VALVE, BOX AND CONCRETE COLLAR	1 EACH

NOTE: SEE CONTRACT BID SPECIFICATION FOR ANY MISC. REMAINING PAY ITEMS.

ABANDONED QUANTITIES

ITEM #	DESCRIPTION	QUANTITY
1	8 INCH PVC PIPE	400 LF
2	8 INCH D.I. RES. JT. PIPE WITH PETROLEUM GASKETS	450 LF
3	8 INCH DUCTILE IRON MECHANICAL JOINT RESILIENT SEAT GATE VALVE, BOX, CONCRETE COLLAR	1 EACH
4	3/4 INCH OR 1 INCH P.E. SERVICE PIPE, PVC COVER PIPE	80 LF
5	5/8 INCH X 3/4 INCH METER SETTING	1 EACH
6	BITUMINOUS PAVING	30 LF
7	CRUSHED STONE TEMP. SURFACE	20 TONS
DIV. B ABANDONED QUANTITIES		
1	8 INCH PVC PIPE TO EXISTING TANK	330 LF

Ⓐ ARC = 56.89'
R = 865.84'
CH = N38°40'49"W - 56.88'

Ⓑ N53°12'07"E - 10.00'

Ⓒ ARC = 71.84'
R = 855.84'
CH = N34°23'36"W - 71.82'

Ⓓ ARC = 76.25'
R = 1487.62'
CH = N33°35'11"W - 76.24'

Ⓔ N54°56'35"E - 10.00'

Ⓕ ARC = 51.93'
R = 1497.62'
CH = N36°02'52"W - 51.92'

Ⓖ S52°57'32"W - 10.00'

Ⓗ ARC = 84.58'
R = 1487.62'
CH = N38°40'12"W - 84.56'

Ⓘ ARC = 164.14'
R = 2860.36'
CH = N38°06'02"W - 164.11'

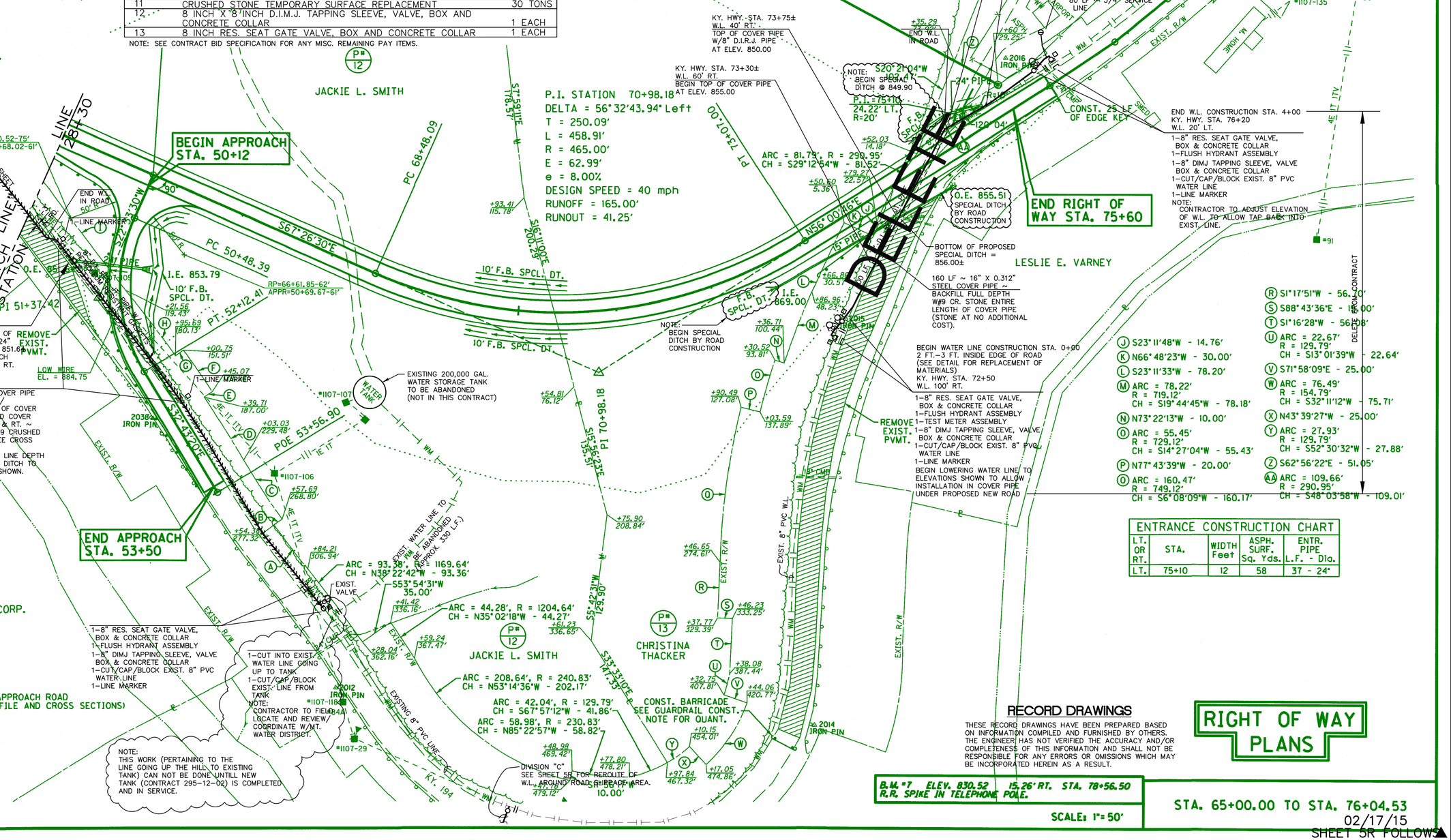

NOTE:
INVERT OUT OF PROPOSED 24" CULVERT = 851.6± AT APPROACH STA. 51+00 RT.

- BEGIN 120 LF ~ 16" x 0.312" STEEL COVER PIPE W/8" CLASS 250 D.I. RES. JT. PIPE W/ PETROLEUM RESISTANT GASKETS. TOP OF COVER PIPE TO BE AT MIN. ELEV. 844.00. END COVER PIPE AT APPR. ROAD STA. 51+00 LT. & RT. ~ BACKFILL TO TOP OF EXIST. GND. W/#9 CRUSHED STONE (AT NO ADDITIONAL COST – SEE CROSS SECTION).
- AT END OF COVER PIPE ADJUST WATER LINE DEPTH TO MAINTAIN 4 FT. MINIMUM COVER IN DITCH TO TIE INTO EXISTING LINE AT LOCATION SHOWN.

1–8" RES. SEAT GATE VALVE, BOX & CONCRETE COLLAR
1–FLUSH HYDRANT ASSEMBLY
1–8" DIMJ TAPPING SLEEVE, VALVE BOX & CONCRETE COLLAR
1–CUT/CAP/BLOCK EXIST. 8" PVC WATER LINE
1–LINE MARKER

1–CUT INTO EXIST. WATER LINE GOING UP TO TANK
1–CUT/CAP/BLOCK EXIST. LINE FROM TANK
NOTE:
CONTRACTOR TO FIELD LOCATE AND REVIEW/ COORDINATE W/MT. WATER DISTRICT.

NOTE:
THIS WORK (PERTAINING TO THE LINE GOING UP THE HILL TO EXISTING TANK) CAN NOT BE DONE UNTILL NEW TANK (CONTRACT 295-12-02) IS COMPLETED AND IN SERVICE.

BEGIN WATER LINE CONSTRUCTION STA. 0+00
2 FT.–3 FT. INSIDE EDGE OF ROAD
(SEE DETAIL FOR REPLACEMENT OF MATERIALS)
KY. HWY. STA. 72+50
W.L. 100' RT.

1–8" RES. SEAT GATE VALVE, BOX & CONCRETE COLLAR
1–FLUSH HYDRANT ASSEMBLY
1–TEST METER ASSEMBLY
1–8" DIMJ TAPPING SLEEVE, VALVE BOX & CONCRETE COLLAR
1–CUT/CAP/BLOCK EXIST. 8" PVC WATER LINE
1–LINE MARKER
BEGIN LOWERING WATER LINE TO ELEVATIONS SHOWN TO ALLOW INSTALLATION IN COVER PIPE UNDER PROPOSED NEW ROAD

END W.L. CONSTRUCTION STA. 4+00
KY. HWY. STA. 76+20
W.L. 20' LT.

1–8" RES. SEAT GATE VALVE, BOX & CONCRETE COLLAR
1–FLUSH HYDRANT ASSEMBLY
1–8" DIMJ TAPPING SLEEVE, VALVE BOX & CONCRETE COLLAR
1–CUT/CAP/BLOCK EXIST. 8" PVC WATER LINE
1–LINE MARKER
NOTE:
CONTRACTOR TO ADJUST ELEVATION OF W.L. TO ALLOW TAP BACK INTO EXIST. LINE.

Ⓐ ARC = 93.38', R = 1169.64'
CH = N38°22'42"W - 93.36'
S53°54'31"W 35.00'

Ⓑ ARC = 44.28', R = 1204.64'
CH = N35°02'18"W - 44.27'

Ⓒ ARC = 208.64', R = 240.83'
CH = N53°14'36"W - 202.17'

Ⓓ ARC = 42.04', R = 129.79'
CH = S67°57'12"W - 41.86'

Ⓔ ARC = 58.98', R = 230.83'
CH = N85°22'57"W - 58.82'

Ⓕ S53°54'31"W 10.00'

Ⓖ ARC = 81.79', R = 290.95'
CH = S29°12'54"W - 81.52'

Ⓗ S20°21'04"W 102.47'

Ⓘ S16°11'00"E 200.29'

Ⓙ S23°11'48"W - 14.76'

Ⓚ N66°48'23"W - 30.00'

Ⓛ S23°11'33"W - 78.20'

Ⓜ ARC = 78.22'
R = 719.12'
CH = S19°44'45"W - 78.18'

Ⓝ N73°22'13"W - 10.00'

Ⓞ ARC = 55.45'
R = 729.12'
CH = S14°27'04"W - 55.43'

Ⓟ N77°43'39"W - 20.00'

Ⓠ ARC = 160.47'
R = 749.12'
CH = S6°08'09"W - 160.17'

Ⓡ S1°17'51"W - 56.10'

Ⓢ S88°43'36"E - 15.00'

Ⓣ S1°16'28"W - 56.08'

Ⓤ ARC = 22.67'
R = 129.79'
CH = S13°01'39"W - 22.64'

Ⓥ S71°58'09"E - 25.00'

Ⓦ ARC = 76.49'
R = 154.79'
CH = S32°11'12"W - 75.71'

Ⓧ N43°39'27"W - 25.00'

Ⓨ ARC = 27.93'
R = 129.79'
CH = S52°30'32"W - 27.88'

Ⓩ S62°56'22"E - 51.05'

ⒶⒶ ARC = 109.66'
R = 290.95'
CH = S48°03'58"W - 109.01'

ENTRANCE CONSTRUCTION CHART

LT. OR RT.	STA.	WIDTH Feet	ASPH. SURF. Sq. Yds.	ENTR. PIPE L.F. - Dia.
LT.	75+10	12	58	37 - 24"

RECORD DRAWINGS

THESE RECORD DRAWINGS HAVE BEEN PREPARED BASED ON INFORMATION COMPILED AND FURNISHED BY OTHERS. THE ENGINEER HAS NOT VERIFIED THE ACCURACY AND/OR COMPLETENESS OF THIS INFORMATION AND SHALL NOT BE RESPONSIBLE FOR ANY ERRORS OR OMISSIONS WHICH MAY BE INCORPORATED HEREIN AS A RESULT.

RIGHT OF WAY PLANS

B.M. #7 ELEV. 830.52 15.26' RT. STA. 78+56.50
R.R. SPIKE IN TELEPHONE POLE.

SCALE: 1"= 50'

STA. 65+00.00 TO STA. 76+04.53
02/17/15
SHEET 5R FOLLOWS

DESIGNER	SRD	DATE	BY	REVISION
DRAWN	DRH			
CHECKED	CRR			
APPROVED	SHC			

GRAPHIC SCALE
SCALE: 1"=50'

ALL RIGHTS RESERVED
THIS DOCUMENT IS THE PROPERTY OF BELL ENGINEERING AND SHALL NOT BE REPRODUCED IN WHOLE OR IN PART OR USED FOR CONSTRUCTION OF OTHER THAN THIS SPECIFIC PROJECT WITHOUT THE WRITTEN PERMISSION OF BELL ENGINEERING.
FACSIMILES OF LICENSED PROFESSIONAL ENGINEER AND/OR LAND SURVEYOR SEALS, IF AFFIXED TO THIS DOCUMENT, SHALL BE CONSIDERED LEGITIMATE ONLY IF SIGNED AND DATED BY THE REGISTRANT.

STATE OF KENTUCKY STEPHEN H. CAUDILL 19888 LICENSED PROFESSIONAL ENGINEER

bell engineering
Lexington, KY (859) 278-5412
Hopkinsville, KY (270) 886-5466

KY. 194 – DESKINS BRANCH
WATER LINE RELOCATION
MOUNTAIN WATER DISTRICT
PIKEVILLE, KENTUCKY

KY. HWY APPROACH STA. 54+20± AND KY. HWY. STA. 72+50± TO KY. HWY. STA. 76+20

DIVISION	A
CONTRACT NO.	295-12-01
DATE	SEPT., 2012
SHEET NO.	5 OF 10

FILE NAME: C:\PWWORK\ALEXI.SMITH\D0144517\KYTC_SHEET.CEL
USER: Alexi.Smith
DATE PLOTTED: January 1, 0001
E-SHEET NAME:
MicroStation v8.11.7.180
F:\WORK\PIKE\DGN 020PL3.DGN

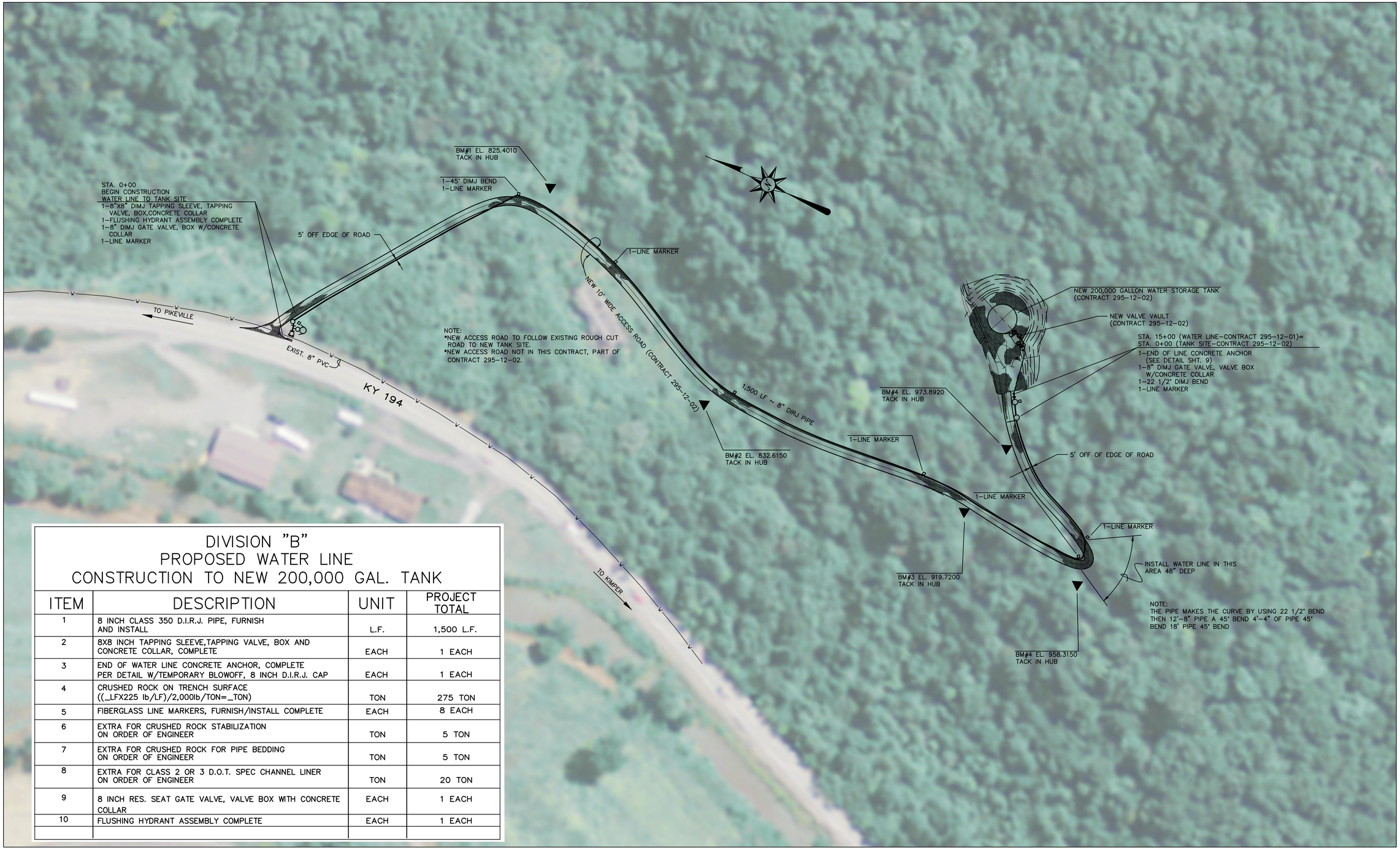

DIVISION "B"
PROPOSED WATER LINE
CONSTRUCTION TO NEW 200,000 GAL. TANK

ITEM	DESCRIPTION	UNIT	PROJECT TOTAL
1	8 INCH CLASS 350 D.I.R.J. PIPE, FURNISH AND INSTALL	L.F.	1,500 L.F.
2	8X8 INCH TAPPING SLEEVE,TAPPING VALVE, BOX AND CONCRETE COLLAR, COMPLETE	EACH	1 EACH
3	END OF WATER LINE CONCRETE ANCHOR, COMPLETE PER DETAIL W/TEMPORARY BLOWOFF, 8 INCH D.I.R.J. CAP	EACH	1 EACH
4	CRUSHED ROCK ON TRENCH SURFACE ((_LFX225 lb/LF)/2,000lb/TON=_TON)	TON	275 TON
5	FIBERGLASS LINE MARKERS, FURNISH/INSTALL COMPLETE	EACH	8 EACH
6	EXTRA FOR CRUSHED ROCK STABILIZATION ON ORDER OF ENGINEER	TON	5 TON
7	EXTRA FOR CRUSHED ROCK FOR PIPE BEDDING ON ORDER OF ENGINEER	TON	5 TON
8	EXTRA FOR CLASS 2 OR 3 D.O.T. SPEC CHANNEL LINER ON ORDER OF ENGINEER	TON	20 TON
9	8 INCH RES. SEAT GATE VALVE, VALVE BOX WITH CONCRETE COLLAR	EACH	1 EACH
10	FLUSHING HYDRANT ASSEMBLY COMPLETE	EACH	1 EACH

WATER LINE PLAN
SCALE ~ 1" = 50'

RECORD DRAWINGS

THESE RECORD DRAWINGS HAVE BEEN PREPARED BASED ON INFORMATION COMPILED AND FURNISHED BY OTHERS. THE ENGINEER HAS NOT VERIFIED THE ACCURACY AND/OR COMPLETENESS OF THIS INFORMATION AND SHALL NOT BE RESPONSIBLE FOR ANY ERRORS OR OMISSIONS WHICH MAY BE INCORPORATED HEREIN AS A RESULT.

02/17/15

		DATE	BY	REVISION
DESIGNER	SRD			
DRAWN	DMB			
CHECKED	SRD			
APPROVED	SHC			

GRAPHIC SCALE

SCALE: AS NOTED

ALL RIGHTS RESERVED
THIS DOCUMENT IS THE PROPERTY OF BELL ENGINEERING AND SHALL NOT BE REPRODUCED IN WHOLE OR IN PART OR USED FOR CONSTRUCTION OF OTHER THAN THIS SPECIFIC PROJECT WITHOUT THE WRITTEN PERMISSION OF BELL ENGINEERING.
FACSIMILE SIGNATURES OR ELECTRONIC SIGNATURES ON THIS DOCUMENT ARE NOT ACCEPTABLE AND/OR ALTERATIONS OR REVISIONS TO THIS DOCUMENT ARE NOT VALID UNLESS ACCOMPANIED BY THE ORIGINAL SEALED AND DATED SIGNATURE OF THE REGISTERED PROFESSIONAL ENGINEER ONLY IF SIGNATURE AND DATE HAS BEEN OBTAINED FROM THE REGISTRANT.

STATE OF KENTUCKY
STEPHEN H. CAUDILL
19888
LICENSED
PROFESSIONAL ENGINEER

bell engineering
Lexington, KY (859) 278-5412
Hopkinsville, KY (270) 886-5466

KY. 194 – DESKINS BRANCH
WATER LINE RELOCATION
MOUNTAIN WATER DISTRICT
PIKEVILLE, KENTUCKY

WATER LINE PLAN TO
WATER STORAGE TANK

DIVISION	"B"
CONTRACT NO.	295-12-01
DATE	SEPT., 2012
SHEET NO.	6 OF 10

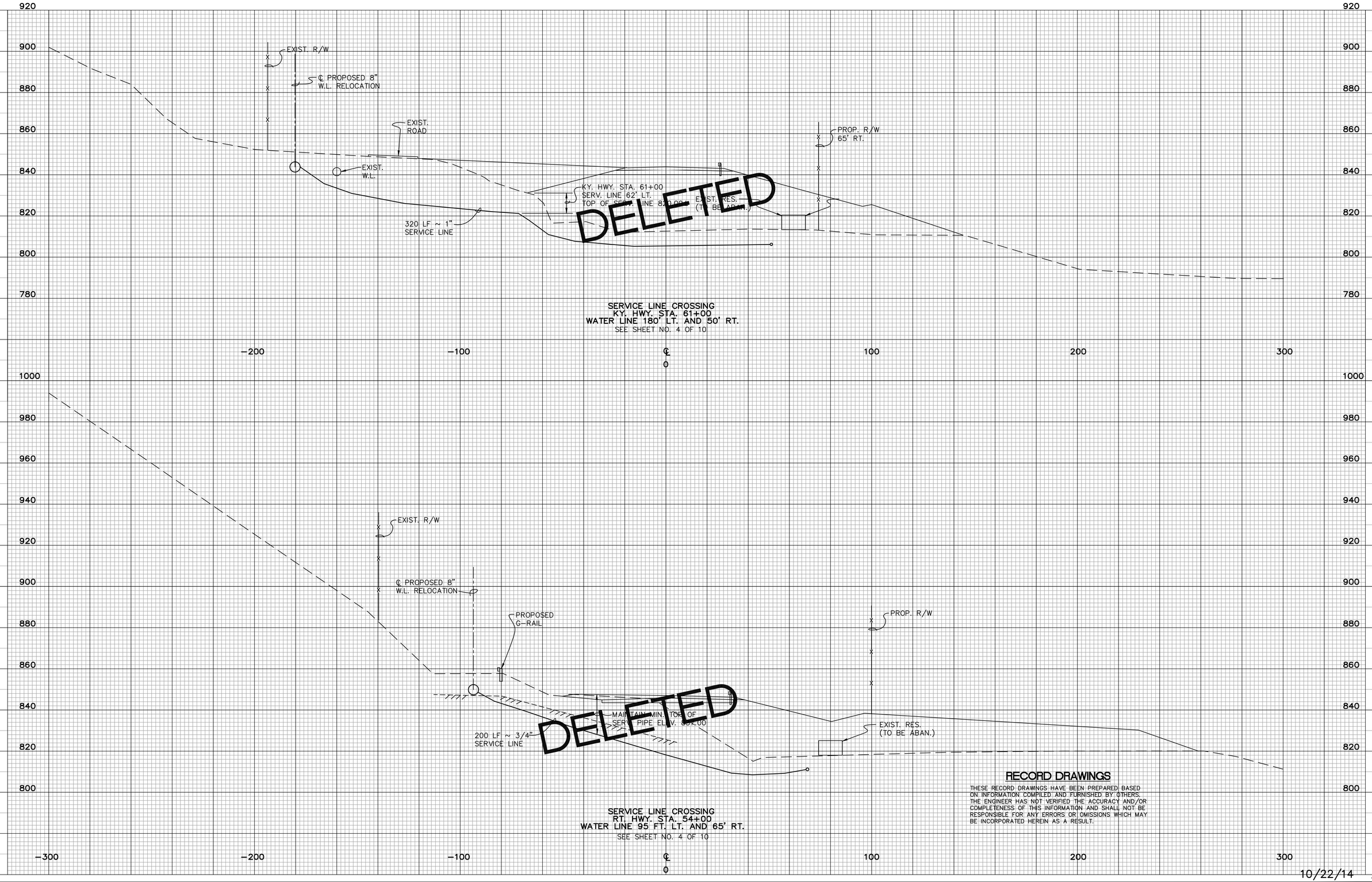

RECORD DRAWINGS

THESE RECORD DRAWINGS HAVE BEEN PREPARED BASED ON INFORMATION COMPILED AND FURNISHED BY OTHERS. THE ENGINEER HAS NOT VERIFIED THE ACCURACY AND/OR COMPLETENESS OF THIS INFORMATION AND SHALL NOT BE RESPONSIBLE FOR ANY ERRORS OR OMISSIONS WHICH MAY BE INCORPORATED HEREIN AS A RESULT.

10/22/14

DESIGNER	SRD	DATE	BY	REVISION
DRAWN	DRH			
CHECKED	CRR			
APPROVED	SHC			

GRAPHIC SCALE

SCALE: 1"=50'

ALL RIGHTS RESERVED
THIS DOCUMENT IS THE PROPERTY OF BELL ENGINEERING AND SHALL NOT BE REPRODUCED IN WHOLE OR IN PART OR USED FOR CONSTRUCTION OF OTHER THAN THIS SPECIFIC PROJECT WITHOUT THE WRITTEN PERMISSION OF BELL ENGINEERING.
FACSIMILES OF LICENSED PROFESSIONAL ENGINEER AND/OR LAND SURVEYOR SEALS, IF AFFIXED TO THIS DOCUMENT, SHALL BE CONSIDERED LEGITIMATE ONLY IF SIGNED AND DATED BY THE REGISTRANT.

STATE OF KENTUCKY STEPHEN H. CAUDILL 19888 LICENSED PROFESSIONAL ENGINEER

bell engineering
Lexington, KY (859) 278-5412
Hopkinsville, KY (270) 886-5466

KY. 194 – DESKINS BRANCH
WATER LINE RELOCATION
MOUNTAIN WATER DISTRICT
PIKEVILLE, KENTUCKY

KY. HWY APPROACH STA. 51+00±
AND KY. HWY. STA. 63+50 TO
KY. HWY. STA. 64+30

DIVISION	"A"
CONTRACT NO.	295-12-01
DATE	SEPT., 2012
SHEET NO.	7 OF 10

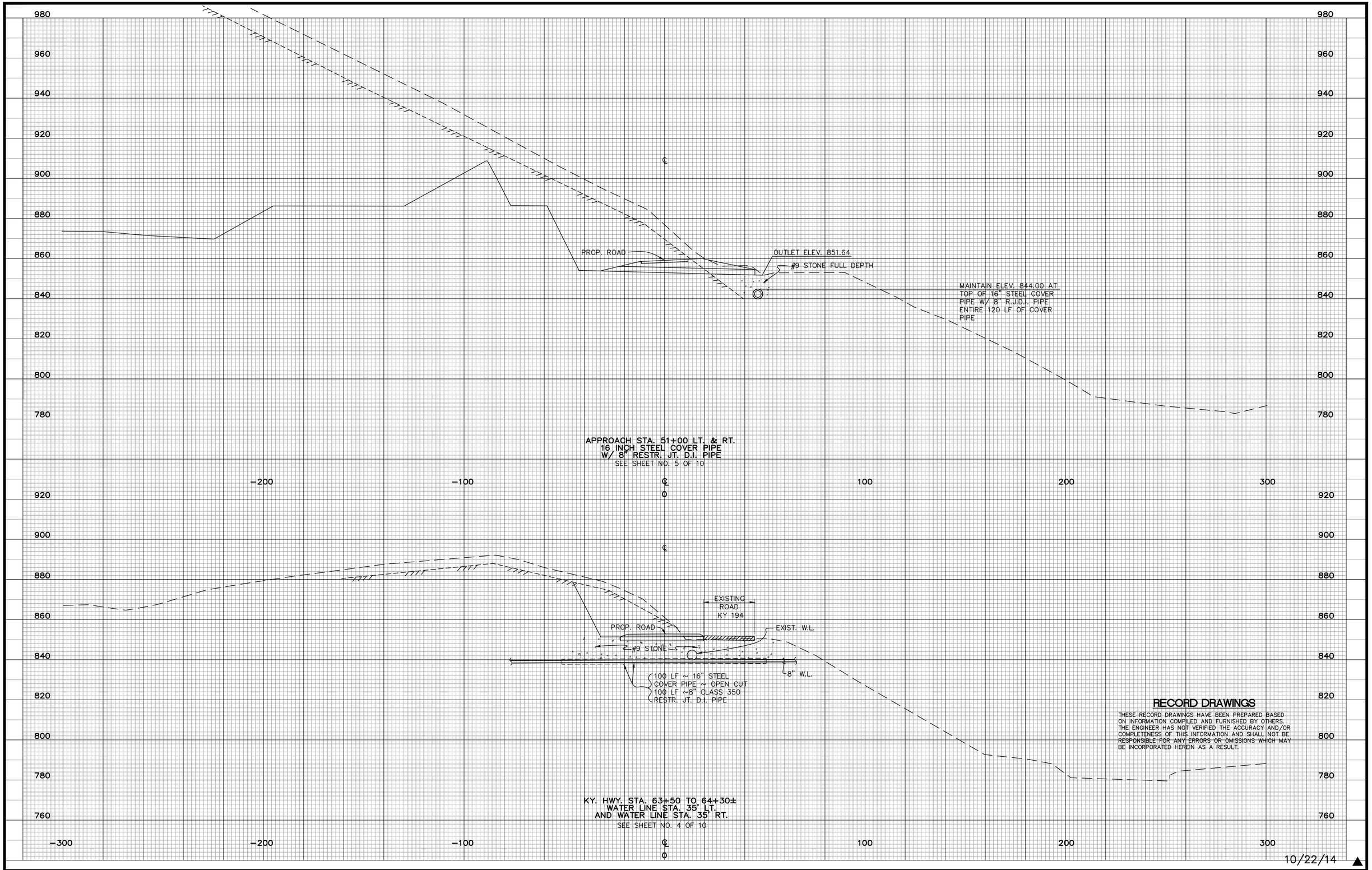

RECORD DRAWINGS

THESE RECORD DRAWINGS HAVE BEEN PREPARED BASED ON INFORMATION COMPILED AND FURNISHED BY OTHERS. THE ENGINEER HAS NOT VERIFIED THE ACCURACY AND/OR COMPLETENESS OF THIS INFORMATION AND SHALL NOT BE RESPONSIBLE FOR ANY ERRORS OR OMISSIONS WHICH MAY BE INCORPORATED HEREIN AS A RESULT.

		DATE	BY	REVISION
DESIGNER	SRD			
DRAWN	DRH			
CHECKED	CRR			
APPROVED	SHC			

GRAPHIC SCALE

SCALE: 1"=50'

ALL RIGHTS RESERVED
THIS DOCUMENT IS THE PROPERTY OF BELL ENGINEERING AND SHALL NOT BE REPRODUCED IN WHOLE OR IN PART OR USED FOR CONSTRUCTION OF OTHER THAN THIS SPECIFIC PROJECT WITHOUT THE WRITTEN PERMISSION OF BELL ENGINEERING.
FACSIMILES OF LICENSED PROFESSIONAL ENGINEER AND/OR LAND SURVEYOR SEALS, IF AFFIXED TO THIS DOCUMENT, SHALL BE CONSIDERED LEGITIMATE ONLY IF SIGNED AND DATED BY THE REGISTRANT.

STATE OF KENTUCKY STEPHEN H. CAUDILL 19888 LICENSED PROFESSIONAL ENGINEER

bell engineering
Lexington, KY (859) 278-5412
Hopkinsville, KY (270) 886-5466

KY. 194 – DESKINS BRANCH
WATER LINE RELOCATION
MOUNTAIN WATER DISTRICT
PIKEVILLE, KENTUCKY

KY. HWY APPROACH STA. 51+00±
AND KY. HWY. STA. 63+50 TO
KY. HWY. STA. 64+30

DIVISION	"A"
CONTRACT NO.	295-12-01
DATE	SEPT., 2012
SHEET NO.	8 OF 10

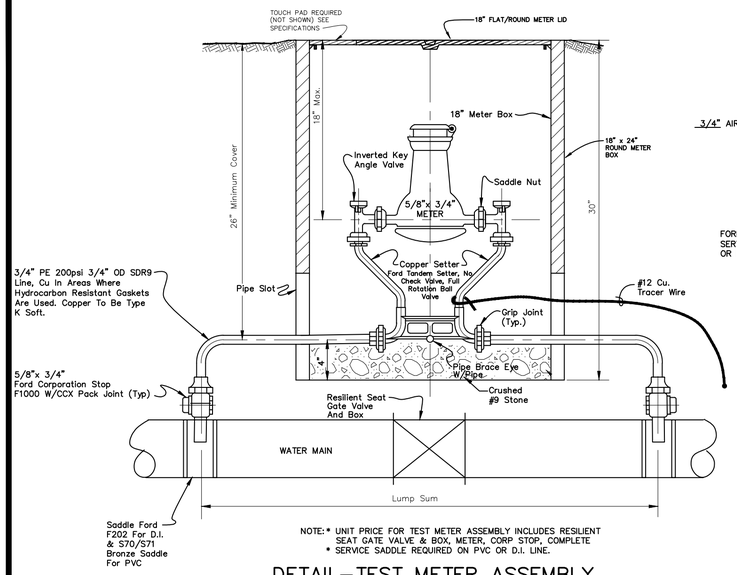

NOTE: * UNIT PRICE FOR TEST METER ASSEMBLY INCLUDES RESILIENT SEAT GATE VALVE & BOX, METER, CORP STOP, COMPLETE
* SERVICE SADDLE REQUIRED ON PVC OR D.I. LINE.

DETAIL–TEST METER ASSEMBLY

NOT TO SCALE

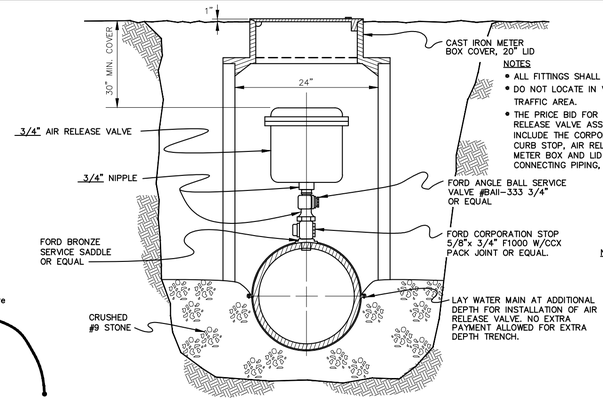

NOTES
- ALL FITTINGS SHALL BE COPPER OR BRONZE
- DO NOT LOCATE IN VEHICLE TRAFFIC AREA.
- THE PRICE BID FOR THE AIR RELEASE VALVE ASSEMBLY SHALL INCLUDE THE CORPORATION STOP, CURB STOP, AIR RELEASE VALVE, METER BOX AND LID AND CONNECTING PIPING, COMPLETE.

AIR RELEASE VALVE ASSEMBLY

N.T.S.

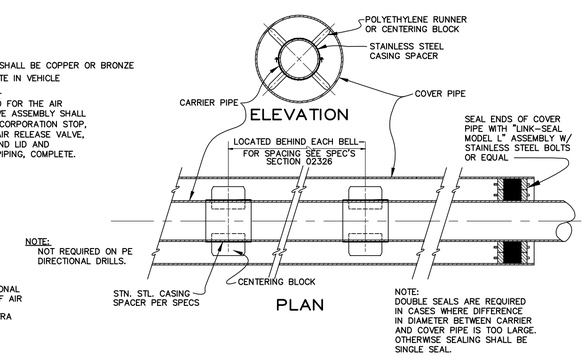

NOTE:
NOT REQUIRED ON PE DIRECTIONAL DRILLS.

NOTE:
DOUBLE SEALS ARE REQUIRED IN CASES WHERE DIFFERENCE IN DIAMETER BETWEEN CARRIER AND COVER PIPE IS TOO LARGE. OTHERWISE SEALING SHALL BE SINGLE SEAL.

DETAIL CARRIER PIPE POSITIONING IN COVER PIPE

NOT TO SCALE

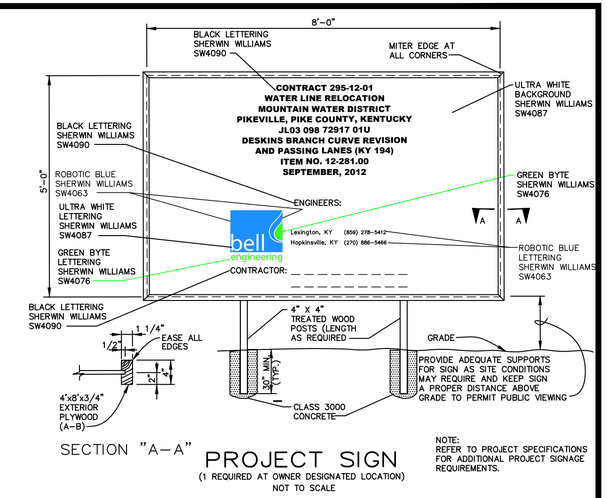

SECTION "A–A"

PROJECT SIGN

(1 REQUIRED AT OWNER DESIGNATED LOCATION)
NOT TO SCALE

NOTE:
REFER TO PROJECT SPECIFICATIONS FOR ADDITIONAL PROJECT SIGNAGE REQUIREMENTS.

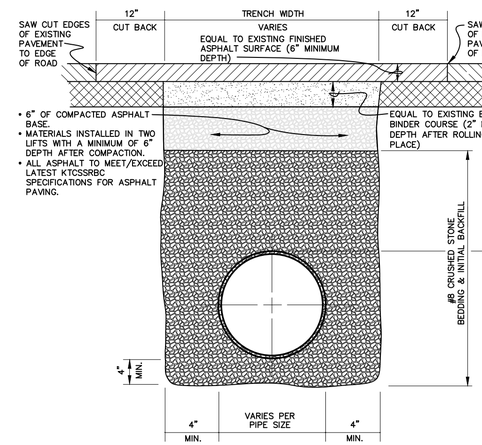

NOTE:
- SURFACE EDGE SHALL BE SAW CUT ON ALL REPAIRS
- AN APPROVED JOINT SEALER IS TO BE APPLIED BETWEEN NEW AND EXISTING PAVEMENT
- ALL DRAINAGE DITCHES AND CULVERTS SHALL BE RESTORED PER LATEST KY. D.O.T. SPECIFICATIONS.
- ALL STRIPING TO BE REPLACED PER D.O.T. SPECIFICATIONS, SECTIONS 842.01, 842.02, 842.03 – PAVEMENT STRIPING PAINT
- ALL ROAD SURFACES SHALL BE PROPERLY CROWNED.
- PRIOR TO KY. D.O.T. ACCEPTANCE OF THE ROAD RESTORATION ALL RESTORATION MUST BE APPROVED BY THE PERMITS SUPERVISOR OR REPRESENTATIVE OF THE PIKE COUNTY, DISTRICT 12, PIKEVILLE KY.

CONTRACT 295–12–01
KY. 194 BACKFILL/ SURFACE RESTORATION METHODS OF PROPOSED WATER LINE RELOCATION DESKINS BRANCH

NO SCALE

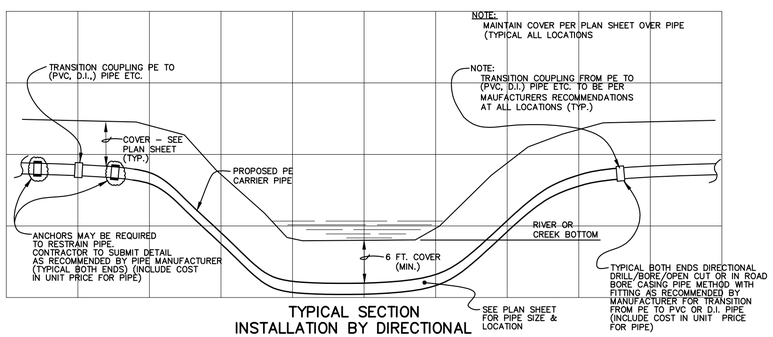

TYPICAL SECTION INSTALLATION BY DIRECTIONAL DRILLING/BORE METHOD

NO SCALE

RECORD DRAWINGS

THESE RECORD DRAWINGS HAVE BEEN PREPARED BASED ON INFORMATION COMPILED AND FURNISHED BY OTHERS. THE ENGINEER HAS NOT VERIFIED THE ACCURACY AND/OR COMPLETENESS OF THIS INFORMATION AND SHALL NOT BE RESPONSIBLE FOR ANY ERRORS OR OMISSIONS WHICH MAY BE INCORPORATED HEREIN AS A RESULT.

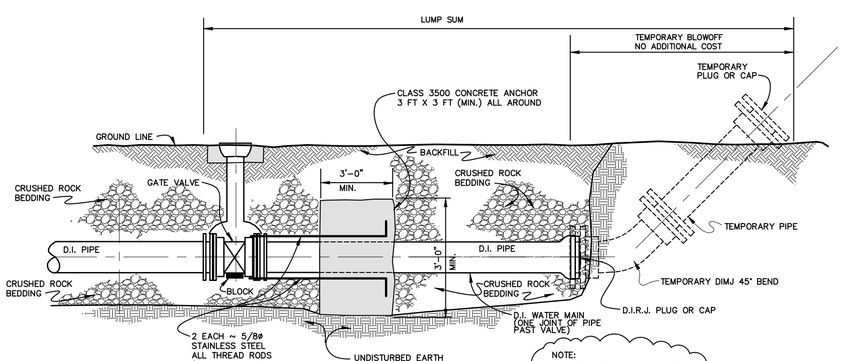

NOTE:
IN ORDER TO FLUSH AND TEST THE LINE, THE CONTRACTOR IS TO INSTALL TEMPORARY 45° BEND AND PIPE W/PLUG/CAP. AFTER THE LINE HAS PASSED PRESSURE TEST, BEEN FLUSHED, THE CONTRACTOR WILL REMOVE THE TEMPORARY 45° BEND AND ADDITIONAL PIPE AND PLUG/CAP PIPE AS SHOWN FOR FUTURE CONNECTION BY OTHERS.

END OF WATER MAIN CONCRETE ANCHOR DETAIL

NOT TO SCALE

NOTE:
#12 Cu. TRACER WIRE TO BE INSTALLED WITH ALL PIPE, VALVES, BLOW-OFFS, ETC., (AT NO ADDITIONAL COST)

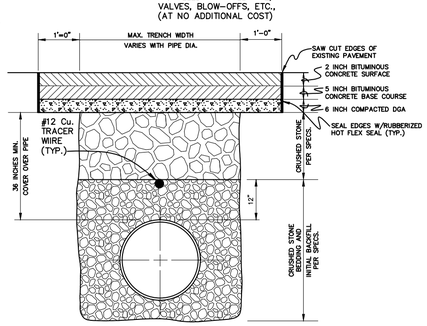

NOTE:
WHERE EXISTING ROAD/DRIVE SURFACE IS CONCRETE, SUBSTITUTE CONCRETE FOR BITUMINOUS CONCRETE, OF DEPTH EQUAL TO EXISTING CONCRETE DEPTH.

TRENCH DETAIL TYPICAL OPEN CUT CROSSING OF COUNTY ROADS

N.T.S.

NOTE:
- ALL BEDDING & BACKFILL SHALL BE SPADED IN PLACE.

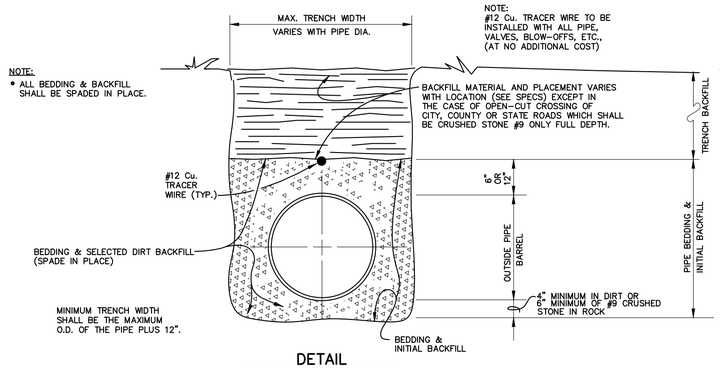

NOTE:
#12 Cu. TRACER WIRE TO BE INSTALLED WITH ALL PIPE, VALVES, BLOW-OFFS, ETC., (AT NO ADDITIONAL COST)

DETAIL BEDDING & BACKFILL WATER MAIN INSTALLATION

N.T.S.

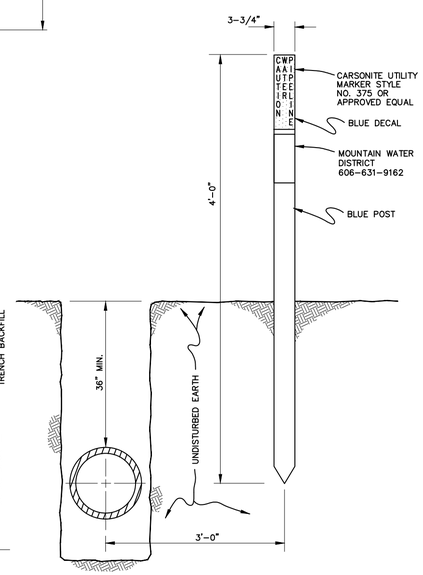

DETAIL FLEXIBLE FIBERGLASS COMPOSITION LINE MARKER

N.T.S.

10/22/14

DESIGNER	SRD
DRAWN	DRH
CHECKED	CRR
APPROVED	SHC

DATE	BY	REVISION

GRAPHIC SCALE

SCALE: AS NOTED

ALL RIGHTS RESERVED
THIS DOCUMENT IS THE PROPERTY OF BELL ENGINEERING AND SHALL NOT BE REPRODUCED IN WHOLE OR IN PART OR USED FOR CONSTRUCTION OF OTHER THAN THIS SPECIFIC PROJECT WITHOUT THE WRITTEN PERMISSION OF BELL ENGINEERING.
FACSIMILES OF LICENSED PROFESSIONAL ENGINEER AND/OR LAND SURVEYOR SEALS, IF AFFIXED TO THIS DOCUMENT, SHALL BE CONSIDERED LEGITIMATE ONLY IF SIGNED AND DATED BY THE REGISTRANT.

STATE OF KENTUCKY STEPHEN H. CAUDILL 19888 LICENSED PROFESSIONAL ENGINEER

bell engineering
Lexington, KY (859) 278-5412
Hopkinsville, KY (270) 886-5466

KY. 194 – DESKINS BRANCH
WATER LINE RELOCATION
MOUNTAIN WATER DISTRICT
PIKEVILLE, KENTUCKY

STANDARD DETAILS

DIVISION	ALL
CONTRACT NO.	295–12–01
DATE	SEPT., 2012
SHEET NO.	9 OF 10

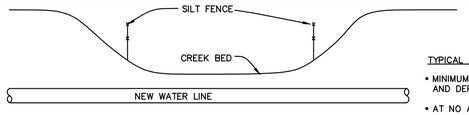

WATER LINE AT CREEK CROSSING

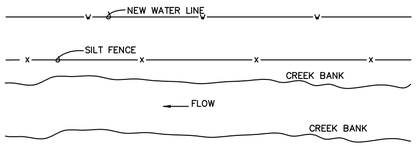

WATER LINE PARALLEL TO CREEK OR RIVER

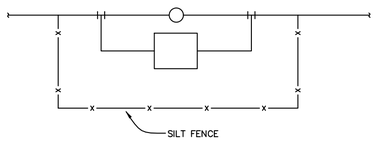

AROUND OUTSIDE OF VAULT

SILT/EROSION CONTROL DETAILS

NOT TO SCALE

TYPICAL ALL DETAILS

- MINIMUM OR PER LATEST DEPARTMENT OF WATER AND DEPARTMENT OF HIGHWAYS REGULATIONS.
- AT NO ADDITIONAL COST.

NOTE TO CONTRACTOR:

- CONTRACTOR TO MEET OR EXCEED THE NATIONWIDE PERMIT NO. 12 AS SHOWN IN DEC. 13, 1996 OR LATEST FEDERAL REGISTER, FINAL NOTICE OF ISSUANCE, REISSUANCE AND MODIFICATION OF NATIONWIDE PERMITS (61 FR 65874).
- CONTRACTOR TO MEET CURRENT REQUIREMENTS AS OUTLINED IN LATEST NOTICE OF INTENT (NOI) FOR STORM WATER DISCHARGE GENERAL REQUIREMENTS AS DESCRIBED BY:
  DEPARTMENT FOR ENVIRONMENTAL PROTECTION
  14 REILLY ROAD
  FRANKFORT, KENTUCKY
  PH. (502)564-3410
- CONTRACTOR TO MEET/EXCEED 401 CLEAN WATER ACT GENERAL CERTIFICAITON, NATIONWIDE PERMIT NO. 12, UTILITY LINE BACKFILL AND BEDDING AS OUTLINED BY THE KENTUCKY NATURAL RESOURCES AND ENVIRONMENTAL PROTECTION CABINET.
- CONTRACTOR TO MEET/EXCEED TEMPORARY SEEDING REQUIREMENTS OF DIVISION OF WATER WHICH REQUIRE ALL DISTURBED AREAS TO BE TEMPORARILY SEEDED WITHIN 14 DAYS AFTER CONSTRUCTION. FOR ADDITIONAL INFORMATION CONTACT:

  DIVISION OF WATER
  FRANKFORT, KENTUCKY

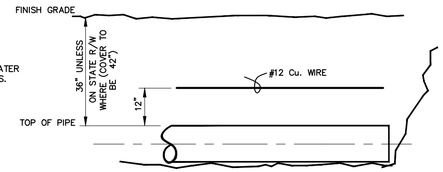

DETECTABLE WIRE INSTALLATION

NOT TO SCALE

NOTE:
1. PVC, D.I. OR PE. PIPE TO BE BACKFILLED 1 FOOT THEN PLACE DETECTABLE WIRE DIRECTLY OVER PIPE.
2. WIRE TO BE EXPOSED AT ALL AIR RELEASE VALVES.

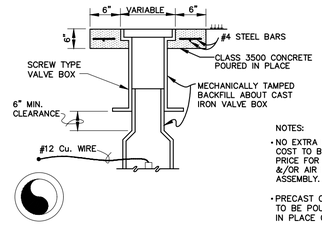

NOTES:

- NO EXTRA PAYMENT ALLOWED~ COST TO BE INCLUDED IN UNIT PRICE FOR VALVE AND BOX &/OR AIR BLEEDER VALVE ASSEMBLY.
- PRECAST CONCRETE COLLAR TO BE POURED. (POURED IN PLACE CONCRETE REQUIRED)

CONCRETE VALVE BOX COLLAR

(REQUIRED ON ALL VALVES)
NOT TO SCALE

NOTE:
IF MECHANICAL JOINT PLUG IS USED ON THE BRANCH, NO BLOCKING WILL BE REQUIRED ON THE PLUG. THE SIDE OF THE TEE SHALL BE BLOCKED IN ALL CASES.

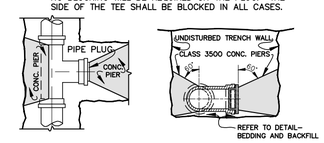

PLAN SECTION

TYPICAL DETAIL OF CONCRETE BLOCKING AT TEES AND PLUGS

NOT TO SCALE

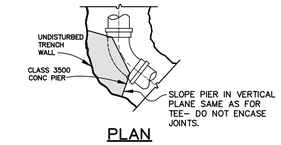

PLAN

TYPICAL DETAIL OF CONCRETE BLOCKING AT HORIZONTAL BENDS

NOT TO SCALE

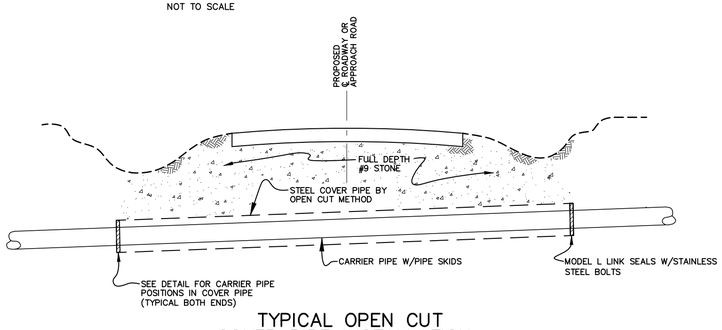

TYPICAL OPEN CUT COVER PIPE INSTALLATION

NTS

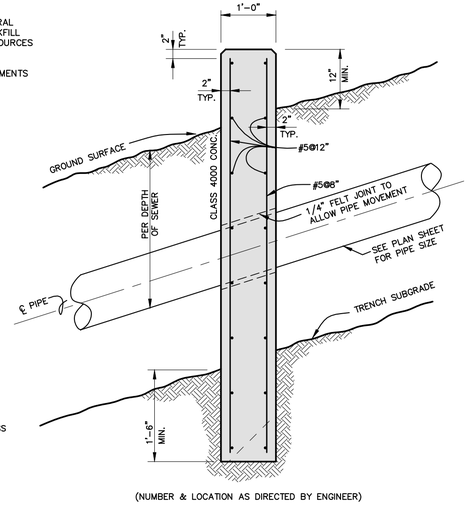

(NUMBER & LOCATION AS DIRECTED BY ENGINEER)

SECTION

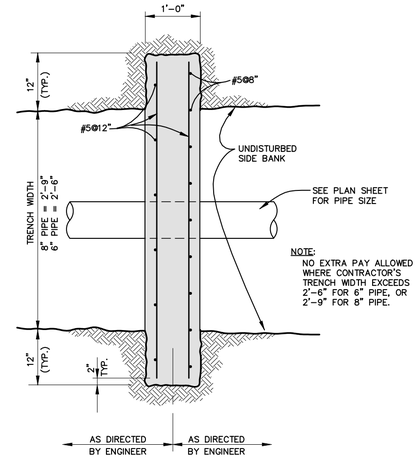

NOTE:
NO EXTRA PAY ALLOWED WHERE CONTRACTOR'S TRENCH WIDTH EXCEEDS 2'-6" FOR 6" PIPE, OR 2'-9" FOR 8" PIPE.

PLAN

EROSION CONTROL DAM

NOT TO SCALE

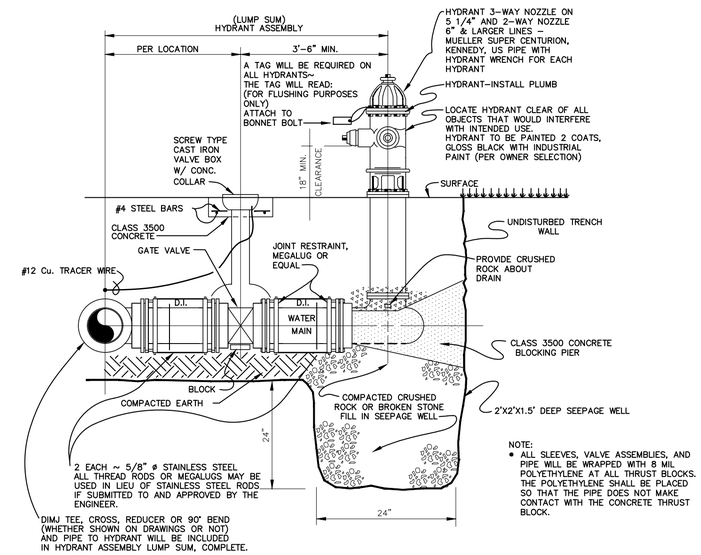

NOTE:

- ALL SLEEVES, VALVE ASSEMBLIES, AND PIPE WILL BE WRAPPED WITH 8 MIL POLYETHYLENE AT ALL THRUST BLOCKS. THE POLYETHYLENE SHALL BE PLACED SO THAT THE PIPE DOES NOT MAKE CONTACT WITH THE CONCRETE THRUST BLOCK.

FLUSHING HYDRANT ASSEMBLY (LUMP SUM)

N.T.S.

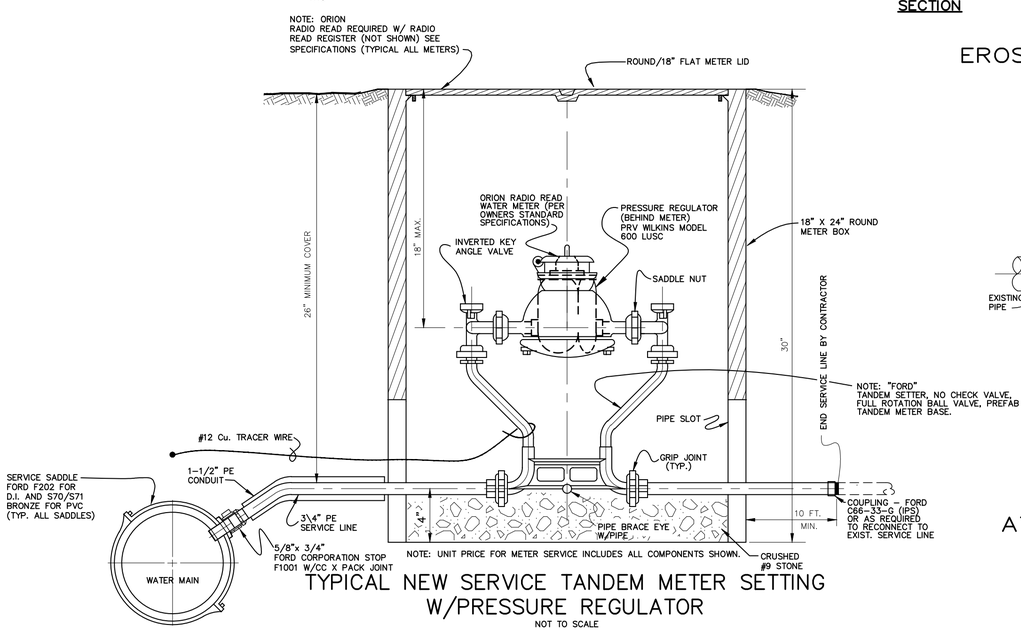

TYPICAL NEW SERVICE TANDEM METER SETTING W/PRESSURE REGULATOR

NOT TO SCALE

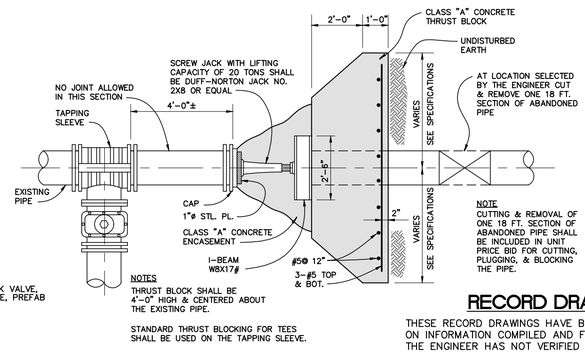

TYPICAL DETAIL CUTTING AND BLOCKING AT TAP INTO EXISTING LINE (LUMP SUM)

NOT TO SCALE

RECORD DRAWINGS

THESE RECORD DRAWINGS HAVE BEEN PREPARED BASED ON INFORMATION COMPILED AND FURNISHED BY OTHERS. THE ENGINEER HAS NOT VERIFIED THE ACCURACY AND/OR COMPLETENESS OF THIS INFORMATION AND SHALL NOT BE RESPONSIBLE FOR ANY ERRORS OR OMISSIONS WHICH MAY BE INCORPORATED HEREIN AS A RESULT.

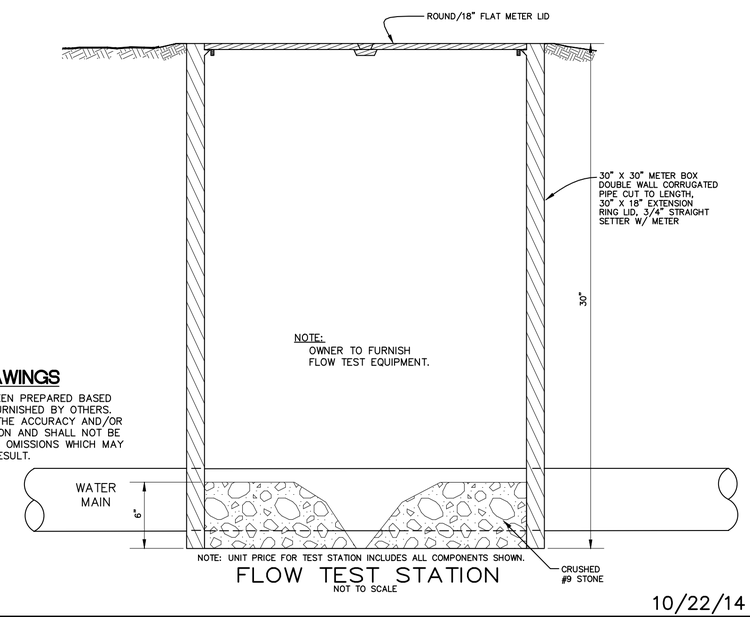

FLOW TEST STATION

NOT TO SCALE

10/22/14

DESIGNER	SRD	DATE	BY	REVISION
DRAWN	DRH			
CHECKED	CRR			
APPROVED	SHC			

GRAPHIC SCALE

SCALE: AS NOTED

ALL RIGHTS RESERVED
THIS DOCUMENT IS THE PROPERTY OF BELL ENGINEERING AND SHALL NOT BE REPRODUCED IN WHOLE OR IN PART OR USED FOR CONSTRUCTION OF OTHER THAN THIS SPECIFIC PROJECT WITHOUT THE WRITTEN PERMISSION OF BELL ENGINEERING.

STATE OF KENTUCKY STEPHEN H. CAUDILL 19888 LICENSED PROFESSIONAL ENGINEER

bell engineering
Lexington, KY (859) 278-5412
Hopkinsville, KY (270) 886-5466

KY. 194 – DESKINS BRANCH
WATER LINE RELOCATION
MOUNTAIN WATER DISTRICT
PIKEVILLE, KENTUCKY

STANDARD DETAILS

DIVISION	ALL
CONTRACT NO.	295-12-01
DATE	SEPT., 2012
SHEET NO.	10 OF 10